Field Manual 10-52-1

HEADQUARTERS
DEPARTMENT OF THE ARMY
Washington, DC, 18 June 1991

WATER SUPPLY POINT EQUIPMENT AND OPERATIONS

TABLE OF CONTENTS

		Page
PREFACE		iii
CHAPTER 1.	WATER TREATMENT	
Section I	Quality	1-1
Section II	Coagulation and Flocculation	1-2
Section III	Filtration	1-5
Section IV	Reverse Osmosis	1-11
Section V	Disinfection	1-16
CHAPTER 2.	WATER RECONNAISSANCE	
Section I	Responsibilities and Planning	2-1
Section II	Air/Ground Site Reconnaissance	2-2
Section III	Reports and Data Sources	2-4
CHAPTER 3.	WATER SOURCE AND WATER POINT DEVELOPMENT	
Section I	Development of Water Sources	3-1
Section II	Development of Water Points	3-11
CHAPTER 4.	PURIFICATION OPERATIONS	
Section I	Site and Safety Considerations	4-1
Section II	600-GPH ROWPU	4-1
Section III	3,000-GPH ROWPU	4-4
Section IV	150,000-GPD ROWPU	4-10
Section V	Production Reports	4-14
Section VI	POL and Chemical Requirements	4-18
CHAPTER 5.	STORAGE OPERATIONS	
Section I	Storage Operations at Purification Sites	5-1
Section II	Bulk Storage Operations	5-4

DISTRIBUTION RESTRICTION: Approved for public release; distribution is unlimited.

*This publication supersedes FM 10-52-1, 2 May 1983.

CHAPTER 6. DISTRIBUTION OPERATIONS

Section I Hose Line Distribution 6-1
Section II SMFT Distribution 6-5
Section III FAWPSS Distribution 6-11
Section IV Issue and Distribution Schedules and Related Forms 6-15

CHAPTER 7. THREAT AND NBC OPERATIONS

Section I Threat on the Battlefield 7-1
Section II Decontamination Operations 7-3
Section III Environmental Considerations in NBC Operations 7-5
Section IV NBC and Field Water Supply 7-7
Section V NBC and Field Water Purification 7-18

CHAPTER 8. EXTREME ENVIRONMENT OPERATIONS

Section I Deserts 8-1
Section II Cold Environment 8-3

APPENDIX A FORMULAS FOR WATER SUPPLY PROBLEMS A-1
B CHLORINE DOSAGE B-1
C PURIFICATION EQUIPMENT CHARACTERISTICS C-1
D STORAGE EQUIPMENT CHARACTERISTICS D-1
E DISTRIBUTION EQUIPMENT CHARACTERISTICS E-1

GLOSSARY Glossary-1
REFERENCES References-1
INDEX Index-1

Preface

PURPOSE

This manual describes water purification, storage, and distribution equipment and its use by TOE units in their GS and DS roles. It also deals with water supply point operations. It includes information on quality control; ground and air reconnaissance; development of a water supply point; NBC and extreme environment operations; and purification, storage, and distribution operations. The appendixes provide additional detailed information on related subjects. Appendix A provides commonly used formulas. Appendix B provides a chart for computing chlorine residual percentages. Appendixes C, D, and E provide characteristics of major water purification, storage, and distribution equipment.

SCOPE

This manual is oriented toward tactical field operations and deals with the responsibilities of management and operator personnel. It can be used in conventional and nuclear warfare. However, do not cite this manual as an authority for requisitions. Base requisitions on TAs or TOEs.

USER INFORMATION

The proponent of this publication is HQ TRADOC. Send comments and recommendations on a DA Form 2028 directly to:

Commander
US Army Quartermaster Center and School
ATTN: ATSM-DTL
Fort Lee, VA 23801-5036

INTERNATIONAL AGREEMENT

This publication implements the following international agreement:

STANAG 2885, *Procedures for the Treatment, Acceptability and Provision of Potable Water in the Field*, edition 3.

ACKNOWLEDGMENT

Material in Chapter 1 dealing with wound and pleated cartridge filters is reprinted with permission of Memtec America Corporation.

This publication contains copyrighted material.

Unless this publication states otherwise, masculine nouns and pronouns do not refer exclusively to men.

CHAPTER 1

Water Treatment

Section I

QUALITY

CHARACTERISTICS

Water quality has two major areas of concern as it relates to the daily operation of a water point. The first is the quality of the raw water source and how it affects the operation of the water purification equipment and use of treatment chemicals. The second is the quality of the product water and surveillance techniques used to guarantee its potability.

The nature of the raw water source will dictate the amount of water each purifier can produce. The total daily water requirement will indicate if additional water purification and storage equipment is needed to meet the demand. TB MED 577 lists the maximum concentration allowed for various chemicals in raw water sources. Concentrations above these limits eliminate a source as a potential water point for military operations. FM 10-52 describes in detail the effects and possible origins of physical and chemical raw water contaminates.

Chemical analyses and microbiological examinations of raw and treated water are required on a routine basis at water point sites. Chemical tests are necessary to ensure correct operation of the water purification equipment. Conduct chemical analyses during treatment to ensure proper chemical dosages and that the product water is potable. Conduct microbiological examinations after treatment to determine potability of the water.

WATER QUALITY ANALYSIS UNIT

The WQAU gives the water treatment operator the ability to rapidly detect five water quality parameters: temperature, pH, total dissolved solids, turbidity, and free available chlorine (chlorine residual).

The WQAU consists of an electronic analytical device, an internal power source, basic spare parts, and the M272 Water Testing Kit-Chemical Agent. The WQAU weighs less than 40 pounds, has a volume of less then 2 cubic feet, and requires less than five minutes to measure the five separate parameters.

The WQAU can operate in geographical areas where air temperatures range from -28°F to 120°F. It is used primarily by water purification personnel that operate DS and GS water purification equipment. Water purification personnel use the unit during water point reconnaissance missions to assess the suitability of raw water sources and during water purification operations to assess the quality of finished water.

APPLICATION

The following sections are summaries of the effects the five physical and chemical characteristics of water have on the four treatment processes Army water purification units use to treat water (coagulation and flocculation, filtration, reverse osmosis, and disinfection). The water treatment specialist must know how to monitor for and respond to the presence or absence of these characteristics if he is to properly operate water purification, storage, and distribution equipment.

Section II

COAGULATION AND FLOCCULATION

RAW WATER IMPURITIES

Impurities present in raw water are in suspended, colloidal, and dissolved forms. These impurities are dissolved organic and inorganic substances, microscopic organisms, and various suspended inorganic materials. You must destabilize and bring together (coagulate) the suspended and colloidal material to form particles. Remove these particles by filtration. Colloidal material is the most difficult to remove from raw water. Processes that remove colloids from water also remove suspensions.

PROPERTIES OF COLLOIDS

Size and electrical charge are properties of colloids. They are explained below.

Size

Colloids have an extremely small size (approximately 0.0001 to 1.0 microns) and a large surface area in relationship to their weight. Because of these factors, they do not readily settle out of solution.

Electrical Charge

Most colloids found in water show a negative charge. Because like charged particles repel, colloidal material will not join to form suspended particles unless the particles' electrical charge is reduced or neutralized.

COAGULATION PRINCIPLES

In coagulation, a chemical (polymer) is fed to the raw water to neutralize and destabilize particle charges on the colloids. Destabilized colloidal particles adhere to each other. Because many colloidal particles are present in the water, charge neutralization among all particles requires immediate and even dispersion of the coagulant. The destabilization reactions occur very rapidly. Therefore, incomplete or slow mixing results in wasted chemical and uneven flocculation.

FLOCCULATION PRINCIPLES

Once colloidal destabilization has occurred, random particle motion causes particle collision, resulting in formation of a larger particle or floe. These neutralized particles stick together forming floe masses. Bacteria particles are also neutralized (but not physically deactivated) and become entangled in the floe. As this massing continues, particle size and weight increase to a point where the larger floe can be removed by filtration (Figure 1-1, page 1-3, and Figure 1-2, page 1-4).

FACTORS INFLUENCING COAGULATION

Turbidity, pH, and color influence the coagulation of raw waters. They influence the type and amount of chemicals required. It is necessary to know which chemicals produce the most satisfactory results and to determine the exact dosage required. This can be done by test analysis or by trial runs of the equipment. The following information is essential for controlling turbidity, pH, and color in the water purification process.

Type of Turbidity

The type of turbidity plays a role in determining needs for the best pH and coagulant dosage. The following generalizations can be made:

- Turbidity caused by clay concentrations requires a minimum of coagulant to provide an entangled mass of floe.
- As turbidity increases, an additional coagulant dosage is generally required, although the dosage of coagulant does not increase in direct proportion to the increase in turbidity. Highly turbid waters require relatively lower coagulant dosages than low turbidity water due to the higher probability of particle collisions.
- The organic matter typically adsorbed on clays in natural stream water does not significantly increase coagulant demand.
- Organic colloids caused by sewage and industrial wastes are more difficult to coagulate because of extensive chemical reactions that occur between the coagulant and the colloidal organic matter.

Test for Turbidity

Determining turbidity is perhaps the most important control test performed. Perform turbidity

tests on raw and treated water to determine overall turbidity removal effectiveness.

Once you determine chemical dosages, perform raw water turbidity tests as often as the raw water quality varies. River water requires more frequent analysis than lake water, especially during the spring when thawing snow and runoff dramatically increase the silt load in rapidly moving rivers. Well water is not usually turbid.

Conduct turbidity analysis on treated water. An increase in effluent turbidity indicates process control problems and may be related to filter breakdown, poor floe formation, or coagulant dosage variation. The filter effluent turbidity test, more than any other test, indicates the effectiveness of the colloid removal process.

pH Range

Coagulant chemicals have an optimum pH range in which good coagulation and flocculation occur in the shortest time with a given dosage. The type of colloid in the water also affects the pH range for efficient coagulation. In some cases, it may be necessary to use chemicals to adjust the pH of the water to obtain the best coagulation and flocculation. Trial and error testing is the only sure method to determine the most efficient coagulant and pH range for the particular water being treated.

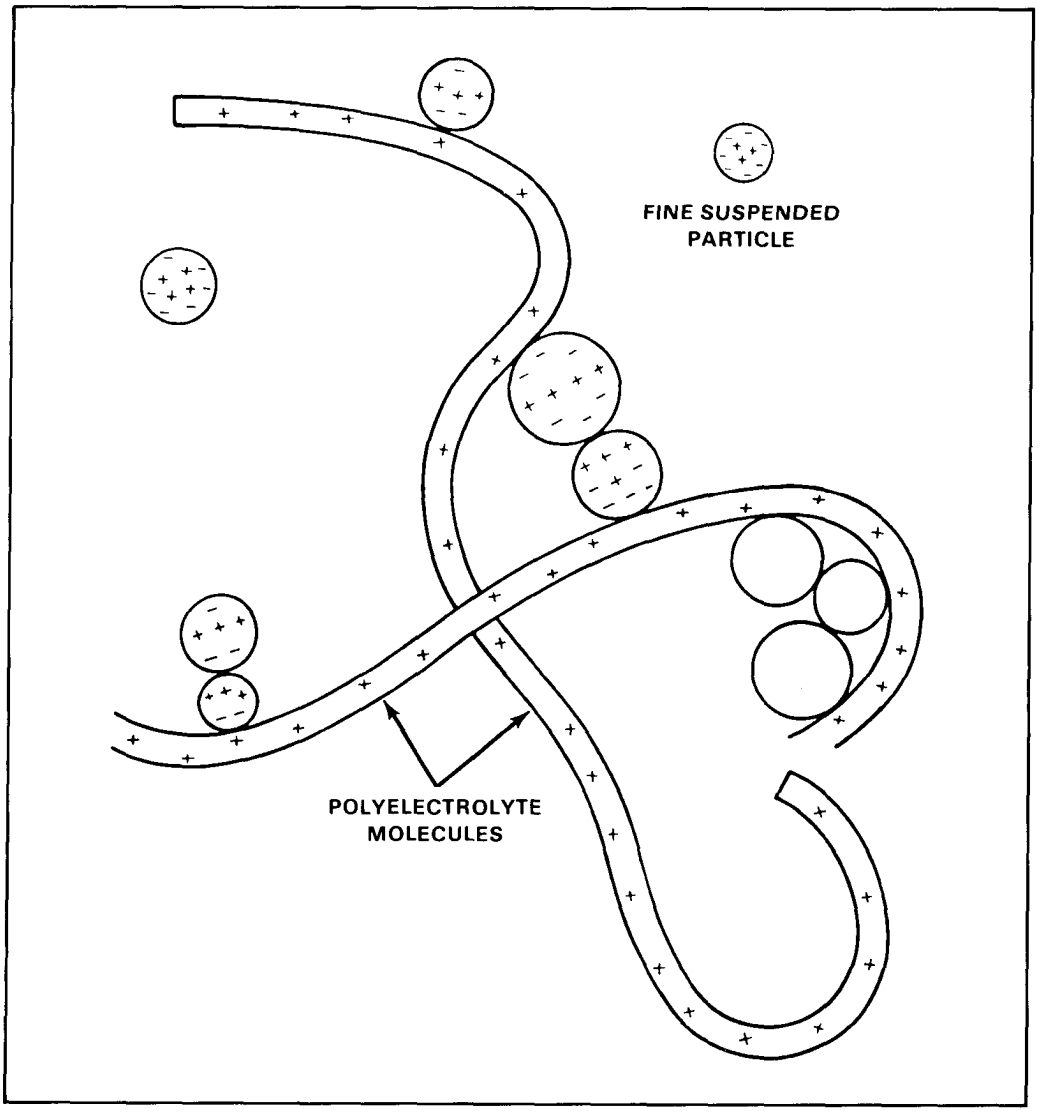

Figure 1-1. Forming a floc particle

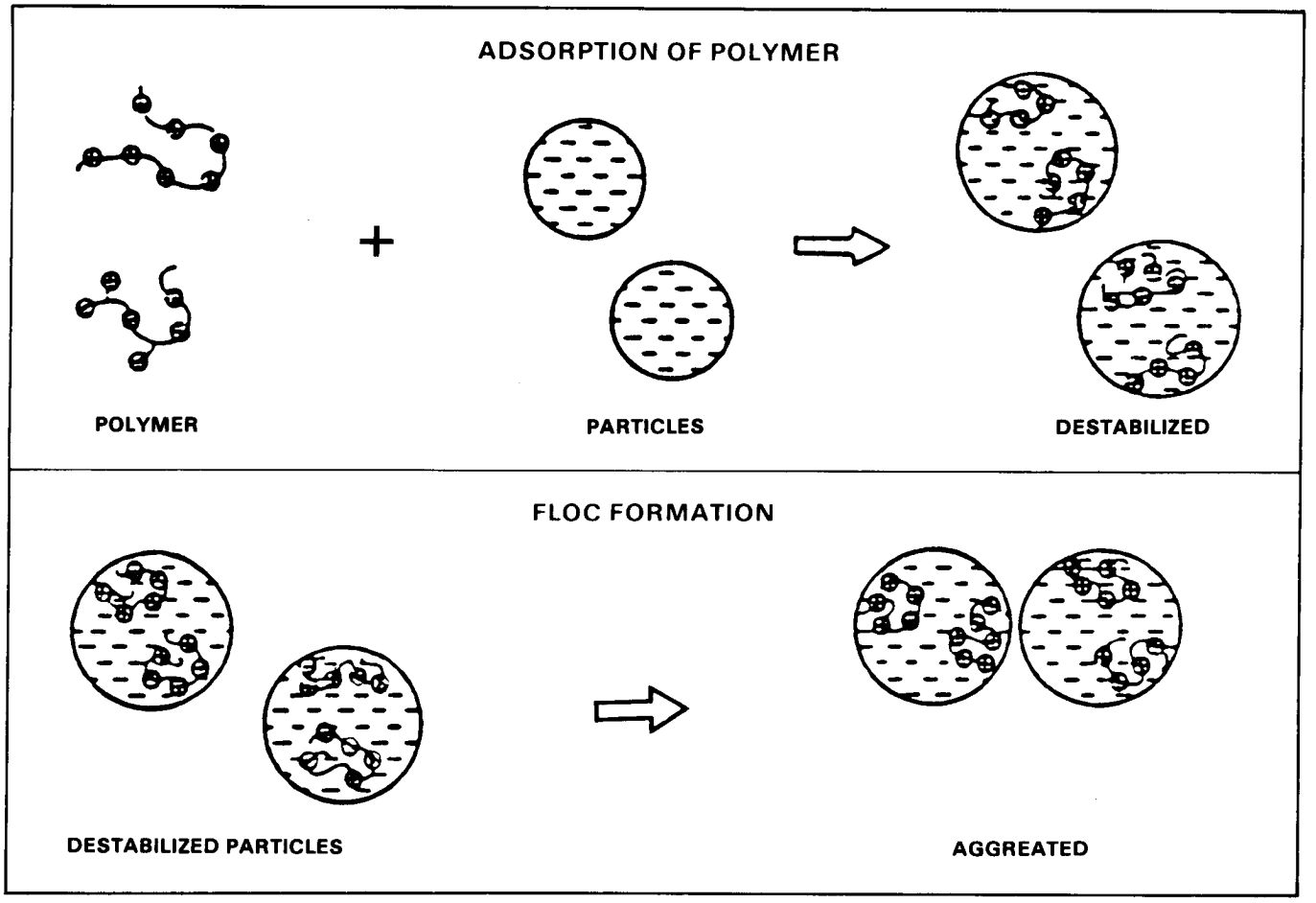

Figure 1-2. Floc formation process

Color

Determine raw water color visually to note any dramatic color changes. Take the proper corrective action (for example, pH adjustment, coagulant dosage change). Color usually increases during spring runoff and again in the fall from surface sources. Color removal deserves special consideration due to special colloidal properties.

Cause. Organic color is primarily caused by the decomposition of natural organic matter. Oxidized, metallic ions (such as iron) produce nonorganic color.

Size. Color-associated colloidal particles are the smallest of the turbidity-causing particles. They generally have diameters of about 0.003 microns, as compared to clays with a typical diameter of 1.0 micron.

Charge. Color particles are negatively charged, with the strength of charge depending on pH. The charge is an integral part of the molecule, rather than merely adsorbed on the surface as with clays.

Removal. The mechanism of color removal is the direct formation of an insoluble chemical compound with a metallic coagulant (such as ferric chloride), rather than charge neutralization usually associated with turbidity removal by polymers. Color removal is affected by pH and should be carried out under acid conditions (pH 4 to 6). Raising the pH for other processes before removing color may cause color fixation to take place. This makes subsequent color removal (even at optimum pH) more difficult.

Physical Factors

Physical factors include temperature, nuclei present, and flash mixing. These factors are explained below.

Temperature. As the temperature decreases, the water viscosity increases. The rate of floe settlement decreases as the water viscosity increases, resulting in general loss of coagulation and flocculation efficiency. Temperature effect can be overcome by adding more chemical coagulant or by operating the coagulation process at the best pH for the particular coagulant being used.

Nuclei present. Although coagulation and floe formation can occur in the complete absence of solid suspended particles, the presence of suspended particles serves to increase the rate of flocculation, density of floe, and removal efficiency.

Flash mixing. Flash mixing is the very rapid and highly turbulent agitation that uniformly disperses the coagulant and promotes coagulant contact with turbidity particles. Flash mixing is usually maintained for 30 to 60 seconds before filtration.

CHEMICAL AIDS

There are a number of chemicals that can be used as aids to coagulation and flocculation. Their characteristics and effects and some precautions for their use are discussed below.

Characteristics

Polyelectrolytes are manufactured synthetically as a high molecular weight, colloidal-size molecule. The molecule can be manufactured to meet varying specific needs. Synthetic polyelectrolytes are available in anionic (negatively charged), cationic (positively charged), or nonionic (neutral) forms. The anionic and nonionic forms are generally used as flocculent aids, while cationic forms are generally used as primary coagulant or coagulant aids. The polymer used by Army ROWPUs is of the cationic form. In concentrated liquid form, polymers are reasonably stable and can be stored one year. In feed solution form, however, shelf life is only about 24 hours. Polymer solution strengths are usually 1 percent or less since more concentrated solutions can start to solidify, causing clogging of feeding devices and valves.

Beneficial Effects

Polymers produce a very large and dense floe that can greatly increase the particle removal rate. The floe produced is often stronger and more easily removed by filtration. Polymers are less easily influenced by water pH, alkalinity, hardness, and turbidity than are other chemical aids. Polymers are easy to prepare, use, and store.

Precautions

Overdosage of polymers can hinder flocculation. Determine precise dosages of polymers by trial and error testing procedures. Only those polymers specifically approved by the USEPA are acceptable for use in potable water treatment used in Army field water operations.

Section III

FILTRATION

FILTRATION PROCESSES

Filtration processes remove microorganisms and other suspended matter from the product water. The suspended material consists of floe from chemical clarification. The removal of these suspended solids is essential, as the feedwater for the reverse osmosis must be as free from suspended solids as possible. The following is an overview of the principles of filtration.

Removal Mechanisms

It is a common misconception that filtration removes suspended solids by a simple straining process where particles too large to pass through openings in the filter media are retained on the media. Actually, the mechanisms involved in removing suspended solids by filtration are very complex. While straining is important at the filter media surface, most solids removal in deep granular filters occurs within the filter bed.

Flocculation and sedimentation in the pore spaces between filter media particles is an important removal mechanism as well as adsorption of particles onto the filter media surface. Additional straining between media particles within the filter also contributes to overall solids removal.

Proper treatment of the influent water to the filters is essential for good filter performance. If not coagulated, fine turbidity will pass through a filter. Also, if large coagulated floes are allowed to develop, they will tend to forma thick layer on top of the filter media, causing substantial resistance to flow and rapid head loss.

Head Loss Development

As floe particles accumulate at the influent surface and in the internal pores of the filter bed, resistance to flow is created and loss of hydraulic head through the bed increases. Backwash the filter when the head loss exceeds a predetermined value. Clean it if the high pressure applied to force water through the bed shears the accumulated floes, causing them to pass through the filter and create a turbid effluent.

Solids Breakthrough

Filter operation and performance are adversely affected by hydraulic surges. The higher rate of flow through the filter bed causes increased velocities between media particles, shearing the accumulated floe particles and carrying them deeper into the filter bed or all the way through the filter.

CLASSIFICATION OF FILTERS

Classify filters by the media type, the flow rate, the direction of flow, the hydraulics (gravity or pressure), and the method of controlling the flow through the filter. The most common method of classifying filters, however, is by the type of filter medium. The two types used in Army water purification equipment are the multimedia and the cartridge.

Multimedia Filters

These filters use sand and crushed anthracite coal on a graded gravel base. Media layers are arranged in a coarse to fine gradation in the direction of flow, which allows greater depth of penetration of floe particles. Multimedia filters are selected with specific gravities so that moderate intermixing between media layers occurs during backwashing. If the different media were in sharply stratified layers, all solids removal would occur due to straining at the top surface of each layer. With intermixing, the upper zones of the fine media mix with the lower zones of the coarse media, resulting in a filter bed with more overall filtering capacity (Figure 1-3, page 1-7). Filter materials are rated by particle size and uniformity. Typical characteristics are listed in Table 1-1 (page 1-8). Filter media characteristics are explained below.

Sand. The types of sand used in filtration are silica and garnet. Garnet sand is denser and smaller than silica sand and is used in the final (bottom) layer in multimedia filters.

Anthracite coal. Crushed anthracite coal is a more angular media with higher porosity than sand, with a resulting higher storage capacity for flocculated solids. The lower specific gravity (density) of the anthracite compared with sand allows the anthracite to maintain its position in the filter bed following backwashing.

Filter gravel. Use silica gravel for a thick base layer to prevent the filter media from being washed out of the filter and to distribute the flow of backwash water. The gravel acts as a buffer zone, protecting the filter media from localized high-velocity streams during backwash. Gravel sizes range from a maximum of 1 to 2 inches to a minimum of about 1/16 inch. To prevent the gravel from being mixed with the overlying media by high-velocity streams, place a layer of dense, coarse garnet sand between the gravel and the fine media.

Cartridge Filters

Select cartridge filters on the basis of a desired filtration performance need. Understanding the important filtration performance variables, such as particle size removal efficiency, filter service life, permeability and system compatibility, is the best way to obtain desired performance.

Filter types. There are two types of cartridge filtration: depth filtration, in which solid particles become trapped within the filter medium, and surface filtration, in which solid particles form a cake on the surface of the filter medium. Wound fiber cartridges function primarily as depth filters and are the standard cartridge used in Army purification units. Pleated cartridges primarily act as surface filters. In every filtration application, both surface filtration and depth filtration will take place simultaneously. However, generally one is more important than the other. Wound and pleated cartridges also perform differently in other ways. Differences in filter

cartridge permeability, available materials of construction, ability to withstand pulsating flow conditions, and particle removal efficiency are just a few examples where wound and pleated cartridges may not perform quite the same, The following will examine the advantages and limitations of wound cartridge filters, as this is the type used in military water purification equipment. This manual reviews cartridge design, capture mechanisms, micron ratings, and performance.

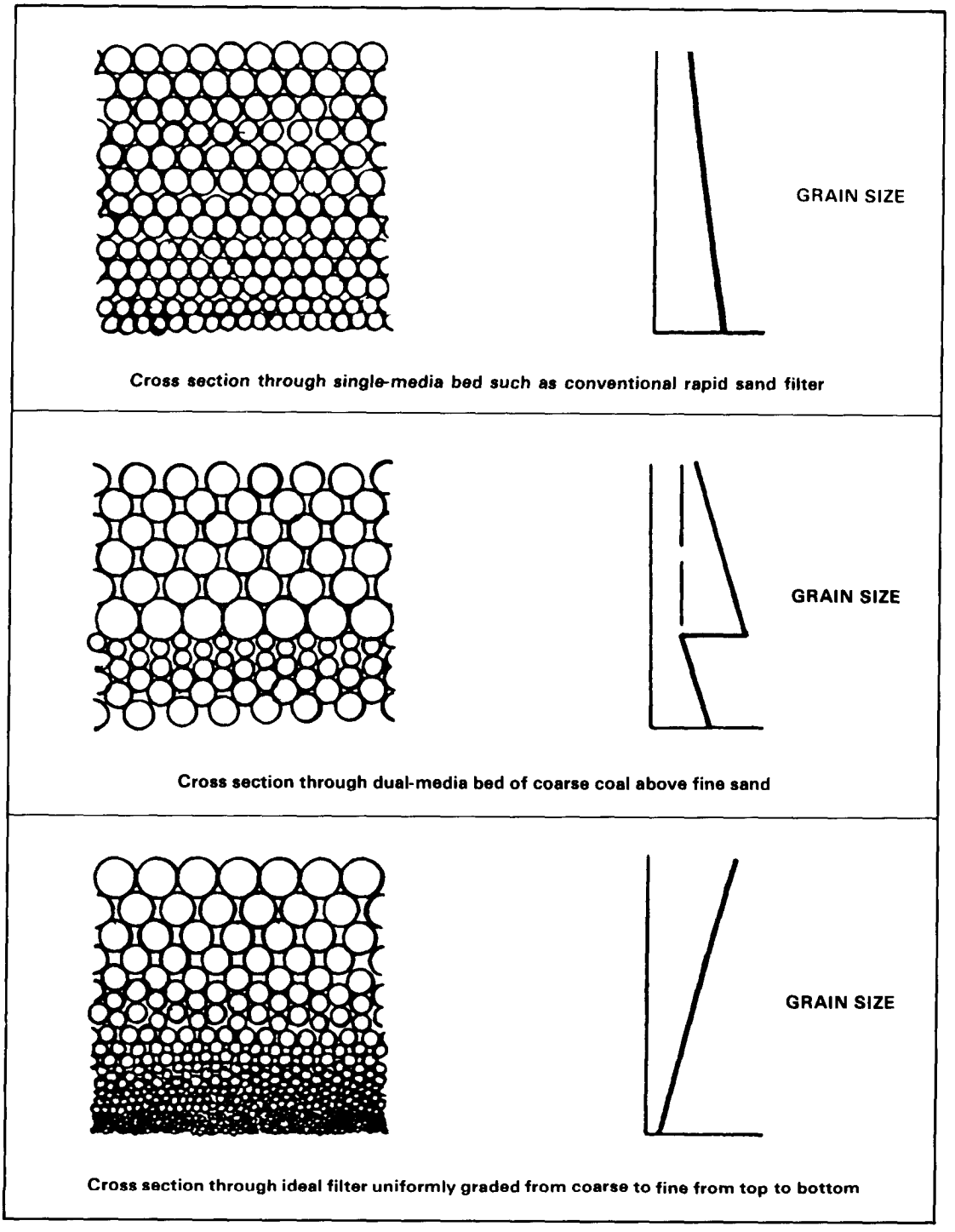

Figure 1-3. Filter bed cross section

Table 1-1. Typical granular media characteristics

MATERIAL	SPECIFIC GRAVITY	HARDNESS (Moh Scale)	POROSITY (%)	EFFECTIVE SIZE (mm)
Crushed Anthracite	1.4	3	55	0.4 to 1.4
Silica Sand	2.65	7	42 to 44	0.2 to 1.0
Garnet Sand	3.1 to 4.3	6.75 to 7.5	—	0.2 to 0.4
Silica Gravel	2.5 to 2.65	7	40	1.0 to 50

Fibrous filter design. Wound and pleated cartridge filters separate suspended particles from a fluid by passing the fluid through a porous fibrous medium. Therefore, these cartridges perform according to the laws that govern fibrous filter structures. There are three main variables that affect the design of fibrous filters. They are fiber diameter, porosity or void volume, and thickness. A change in any one of these three variables will also affect the different performance characteristics of wound and pleated filters. These variables are also responsible for the subtle differences that produce different particle removal efficiencies within each type of cartridge.

Wound cartridge design. A wound fiber cartridge has 3/4 inch of yarn continuously wound around a perforated center support core. The yarn may be cotton, polypropylene, rayon, acrylic, polyester, nylon, fiberglass, or Teflon. The yarn consists of intertwined fibers that are 15 to 20 microns in diameter. These fine fibers are important in obtaining small, pore-size openings. Wound fiber cartridges are available in various lengths and micron ratings. Other important design features include the availability of various center core materials for fluid compatibility, core covers and end treatments to reduce the possibility of media migration, and extended cores to improve cartridge sealing (Figure 1-4, page 1-9).

Capture mechanisms. Remove suspended solid particles from a fluid stream by a filter in one of two ways. First, the particles may simply be too large to pass through the filter flow channel opening or pore. The particle is physically restrained by the filter medium or its extension, the filter cake. This kind of direct particle interception by the filter is an example of mechanical capture. A screen or sieve traps particles on its surface in this way. Mechanical capture is also a characteristic of pleated cartridge filters. Mechanical capture by sieving generally occurs at the filter's surface. However, particles can also penetrate the larger surface pores only to be sieved by smaller pores within the successive inner layers of the filter. This internal sieving is likely to occur when the filter medium has a broad pore-size distribution, not unlike that found in wound fiber cartridges. The second type of filter capture mechanism occurs when a particle enters a filter opening, or pore, larger than itself. Under the influence of inertia, diffusion, or other forces, the particle collides with the pore wall or interior pore structure. Once the particle contacts the interior pore surface, it sticks to that surface. This type of capture mechanism is known as adsorptive capture. There are several attractive forces that may be responsible for retaining a particle on the interior pore surface. These include electrostatic (opposite charge), hydrogen bonding, and hydrodynamic forces.

Wound cartridge workings. Mechanical and adsorption capture mechanisms are present in every filtration application, whether wound or pleated cartridges are used. However, a wound fiber cartridge, with its substantial media thickness and graded density, accentuates adsorptive capture mechanisms. The wound fiber cartridge design creates a tortuous, fluid flow passage. Suspended particles entering the filter's matrix are subjected to endless fiber impact and internal sieving obstructions. This circuitous pathway is effective in retaining deformable particles. In these applications, it is important that the flow rate per length of cartridge be low to increase contact time with the filter medium. Particle capture occurs throughout the depth of

the wound cartridge from the surface to the center core. When the particle-size distribution of the contaminant is broad, wound fiber cartridges have an excellent solids-holding capacity. This is due to the filter's high porosity (high internal void volume) and graded density design. Larger particles stop at or near the surface. Smaller particles are trapped at each of the successively denser layers. The result is substantial solids-holding capacity and a long service life. System operating conditions greatly influence wound fiber filter performance. Unsteady flow conditions may dislodge particles captured by adsorptive means. Too high a differential pressure across the filter media can drive a soft, deformable particle through the filter matrix. It is also important that wound filters be properly sized and operated under recommended flow rate conditions for longer service life. In most cases, the flow rate per 10-inch length of cartridge should not exceed 5 GPM. In fact, reducing the flow rate by a factor of five (for example, from 5 GPM to 1 GPM) will double the amount of solids a wound fiber cartridge can hold before reaching the recommended change-out differential pressure.

Micron ratings. All cartridge filters will remove a certain percentage of particles of each size that they receive in the fluid stream. A filter's micron rating is an indication of its removal efficiency performance. For it to have meaning, the micron rating of the cartridge must include the level of removal efficiency, usually expressed as a percentage, at the rated micron size. Wound cartridge filters used by the Army have 90 percent removal efficiency as their stated micron rating. While micron ratings corresponding to higher removal efficiencies are available, their filtration ability does not increase.

Cartridge filter performance. Permeability is a measure of the flow rate of a fluid through a porous medium at a specified pressure differential. It is the ease at which a porous medium will allow the passage of fluid. The filter medium thickness, surface area, porosity, and materials of construction affect the filter's permeability. Combined, these variables also dictate the pressure drop across the filter cartridge at a given flow rate and fluid viscosity. For example, the permeability of a filter cartridge would be stated as 3 GPM/10-inch length at 1 psid for a fluid with a viscosity of 1 centipoise. Permeability is inversely related to the removal efficiency of the filter medium. Cartridge filters with higher removal efficiencies are less permeable than those with lower removal efficiencies. In other words, a l-micron cartridge has a greater resistance to flow when compared to a 50-micron cartridge. Operating wound fiber cartridges under high differential pressure or high flow rate conditions may adversely affect the life and removal efficiency of the filter.

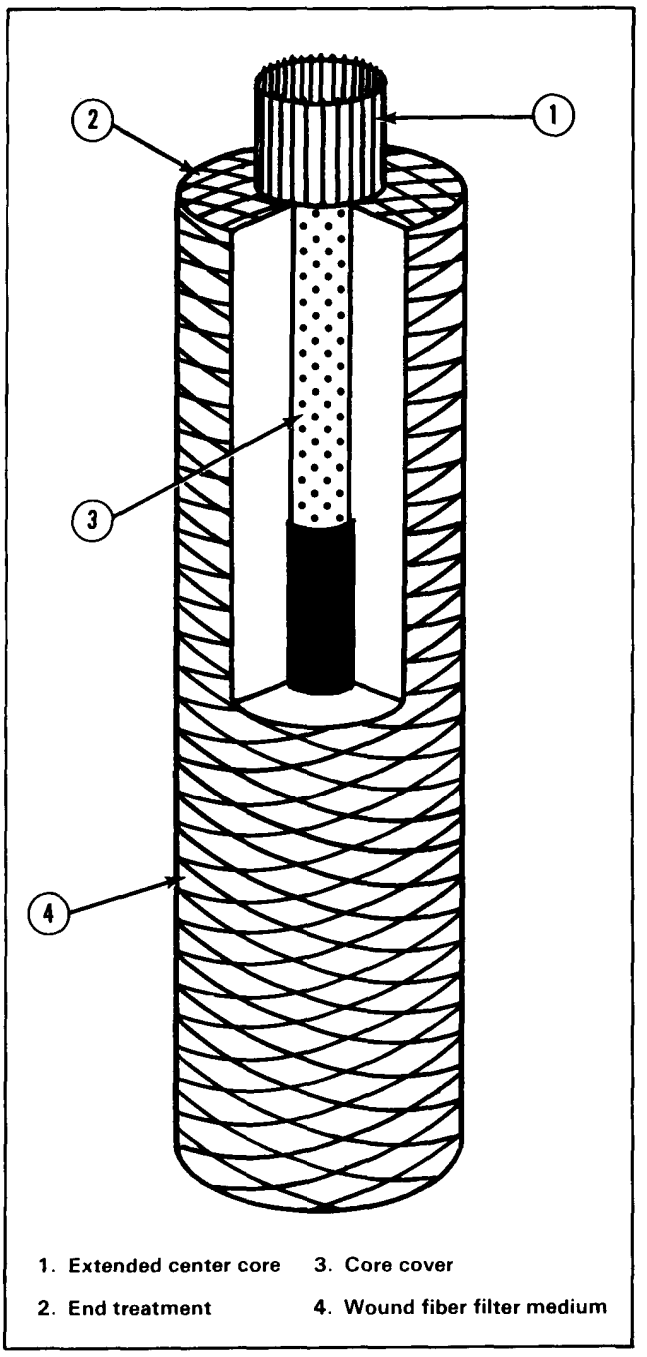

Figure 1-4. Cartridge filter

Filter service life. Perhaps the most important filter performance relationship is the effect of flow rate on filter service life. As the flow rate per cartridge increases, filter service life decreases. The consequences of this relationship are economic and functional. Filter life is affected by initial differential pressure. To increase filter life, it is important to keep the initial differential pressure as low as possible. This is done by keeping the flow rate through the filter cartridge as low as possible. One method of reducing the flow rate per unit of filter area is to increase the number of cartridges while keeping the system flow rate constant. Increasing the number of cartridges from one to three triples the amount of surface area. Increasing the surface area by three may increase the life up to nine times. This is why all Army water purification units have multiple wound fiber cartridges. As discussed earlier, actual performance and service life can vary with system conditions and the nature of the solid particulate. However, it is important to remember that you can improve both filter performance and service life by lowering the flow rate per cartridge.

Flow Direction

You operate most granular filters with the direction of flow from top to bottom through the bed. This is because most filters, particularly older sand filters, use gravity for the hydraulic driving force. Some pressure sand filters operate in an upflow mode; however, these are exceptions.

Flow Control

The final classification of filters is based on the way you control the flow rate through the filter bed. There are three basic operating modes: constant rate, constant pressure, and variable declining rate.

Constant rate. Constant rate can be attained by using a flow control valve on the filter effluent. At the start of a filtration run, the media is clean and flow is too fast. for good filtration; therefore, the control valve is partially closed. As filtration continues and the media clogs with solids, the control valve gradually opens to maintain constant flow. An alternate method of constant rate filtration control in gravity filters is to build the filter cells with extra high walls and to split the flow equally between all filters. As the filter becomes clogged (causing resistance to flow), the water level above the media rises. This increases the head applied to the filter, thereby maintaining a constant flow rate.

Constant pressure. In constant pressure systems, the same hydraulic head is applied to the filter throughout the filtration run. Initially, the media is clean, resistance to flow is minimal, and the resulting flow rate is high. As the media clogs, the flow rate through the filter decreases. Pressure filters are similar to gravity filters in most aspects of construction and operation. The major difference is that the driving force applied to drive the water through the filter is the static pressure supplied by a pump. Filtration rates, methods of backwashing, and media are the same for gravity and pressure systems. Advantages of pressure filtration versus gravity are the higher head loss at which filters can be operated before backwashing is required, the higher residual head in the filter effluent line, and the reduced vertical dimensions of the filter. A major disadvantage is that the operator cannot watch the filter operations to monitor problems (for example, improper backwashing and mud ball formation).

Variable declining rate. Design of variable declining rate filtration systems has all filters fed from an oversized, common header. When one filter at a time is taken out of operation for cleaning or as a filter becomes fouled, the flow backs up through the common header and is applied evenly to the remaining filters, resulting in a slight, gradual increase in flow rate through all filters in operation. The filters are provided with extra depth above the media surface to allow the water level to rise as the media becomes clogged or when more water is applied as a result of backwashing a filter. The main differences between variable declining rate filtration and constant rate filtration with equal flow splitting are the location and type of influent arrangement and the head available for filtering.

FILTER OPERATIONS

Influent water to a filter discharges into a baffle to dissipate the velocity head that could disturb the surface of the filter media. The flow then passes through the filter media, gravel base, and drains. A rate controller is located in the effluent line from the filter to maintain a constant flow rate through the filter. Backwash the bed when the head loss through the filter bed increases above a certain level as a result of clogging of the media with removed solids, when effluent water quality fails

to meet criteria, or when breakthrough of solids occurs. Backwashing is done by reversing the flow through the bed; this expands the media and shears loose the accumulated solids, which are carried away in the backwash water. Operating problems may include mud accumulation and permanent clogging of filter media, coating of media grains with various materials, improper coagulation, and backwash control. The single most common problem in filtration is unsatisfactory filter media cleaning.

Filter Rate

Maintain a relatively constant, or slightly declining, filter rate to prevent solids breakthrough. Sudden flow surges are not desirable as they may flush solids through the bed. Control the flow at the influent or effluent end of the filter.

Loss of Head

The resistance to water passing through the filter bed causes a loss of hydraulic head between the inlet and outlet of the filter. At the beginning of a filter run, suspended material collects primarily in the upper layer of the filter. This causes resistance to flow and water pressure below the bed decreases, causing an increase in the loss of head. As the resistance to flow increases, accumulated floe particles penetrate deeper into the bed, and head loss continues to increase until backwashing is required. The amount of head loss shortly after washing the filter varies with the type of media. The higher the rate of filtration and the finer the media, the higher the initial head loss. Higher losses of head can cause the media to become tightly packed, creating solids breakthrough and difficulty in backwashing. The multimedia gauge is an extremely important guide for proper operation. Check it periodically to ensure its accuracy.

Backwashing Filters

After a filter has been operating for some time, turbidity and suspended solids collect on the surface and in the filter media to the extent that flow of water through the bed is limited and a significant loss of hydraulic head results. At this point, solids can shear loose and break through into the effluent. When these conditions occur, it is necessary to backwash the accumulated solids from the filter. Backwashing is done by reversing the flow, forcing filtered water up through the gravel and sand. This loosens the filter media, agitating the media grains against each other and washing accumulated solids off the grain surfaces. The wash water flows to waste, carrying the solids with it. The flow rate of backwash water should be sufficient for cleaning the media but not so much that loss of media results. Expand the filter media at least 20 to 25 percent for good cleaning action, although a 40 percent expansion is best in many cases. Higher expansions risk washing out some filter media along with the accumulated solids. You can increase media cleaning by increasing interparticle abrasion, although the bulk of the cleaning action is due to the force of the rising backwash water. The amount of water required for sufficient backwashing is typically 1 to 5 percent of the total amount of water filtered, with an average of 2 percent. The duration of backwash required depends on the type and size of filter media, temperature of the water, type of solids being removed, and backwash flow rate.

Section IV

REVERSE OSMOSIS

PRINCIPLES

Reverse osmosis is a purification process in which filtered water is pumped against a semipermeable membrane under great pressure. The membrane allows product water to pass through while rejecting the impurities, both suspended and dissolved. You must use extremely high pressures to get a useful volume of water passing through a unit area of membrane. The reverse osmosis process is illustrated in Figure 1-5 (page 1-12). Although RO can appear to be similar to a filtration process, there are distinct differences. In filtration, the entire liquid stream flows through

the porous filter medium, and there are no changes in chemical potential between the feed and filtrate. In RO, the feed flows parallel to the semipermeable membrane with a fraction of it passing through a given membrane area; dissolved ionic and organic solutes are largely rejected by the membrane. RO removes selenium, copper, iron, manganese, chloride, lindane, radiation, and most color- and odor-causing compounds.

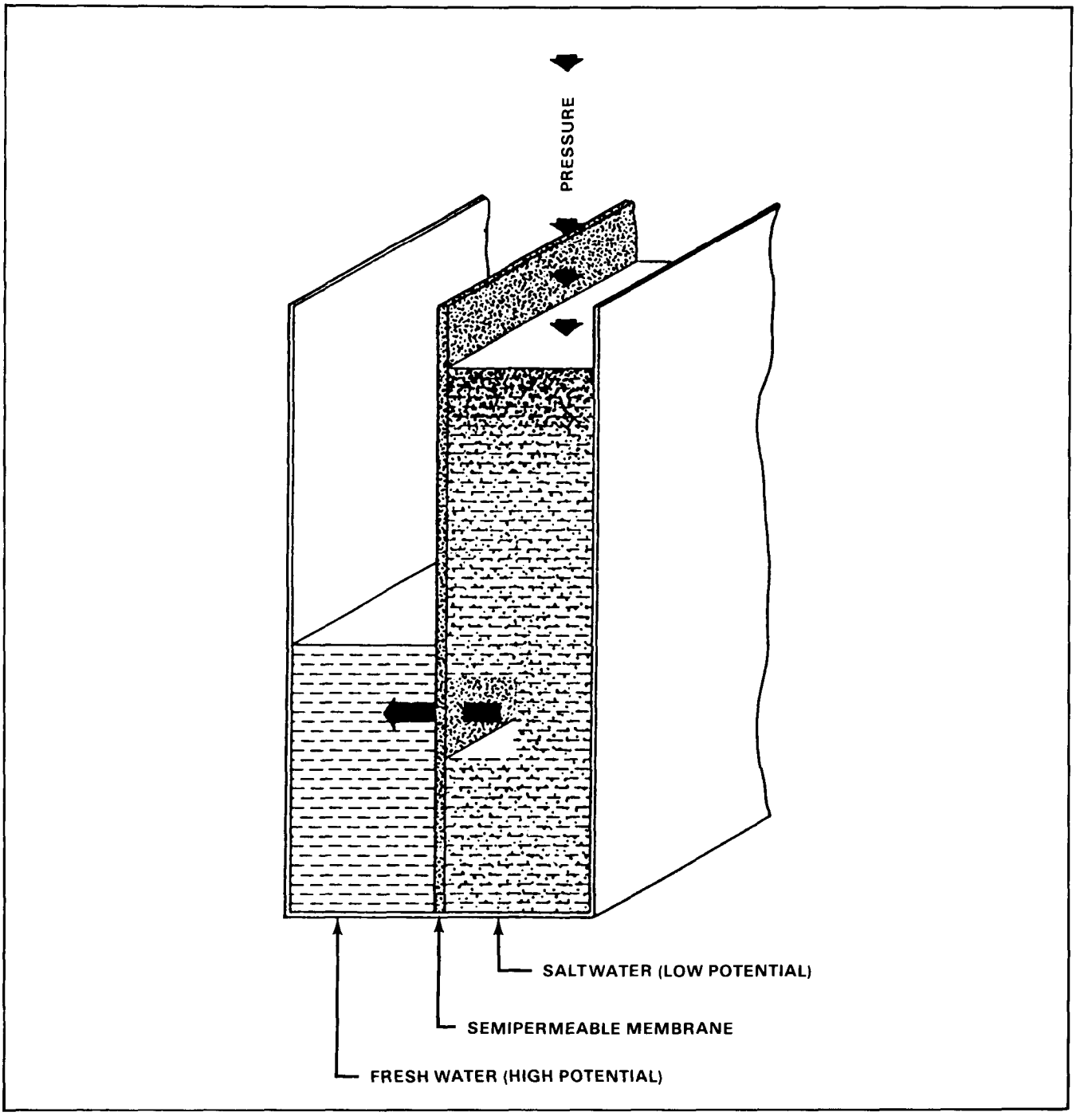

Figure 1-5. RO process

ELEMENT CHARACTERISTICS

An RO element is composed of sheets of membranes (Figure 1-6, page 1-13) in a spirally-wound tube. Mesh spacers are inserted between layers of the membrane to allow water to flow into and out of the element. The meaning of spirally-wound is best understood if you review the partially unwound element in Figure 1-7 (page 1-14). The center of the element is a plastic tube with small holes for the collection of product water. The leaves of membranes and spacers are rolled around the product water collection tube in the center of the element. The structure of the RO element allows water to flow from one end of the element to the other without any water passing through the membrane until the osmotic pressure is overcome. Water at lower than osmotic pressure flows through the elements and out the brine channel, but not into the product line. Under a lower than osmotic pressure condition, the elements, and consequently the membrane, are doing no work. The water just passes by the membrane rather than through it, so water does not collect in the product water collection tube.

When the RO element is operating normally (at feed pressures in excess of the osmotic pressure), the concentrated brine (waste) stream flows out through the feedwater spaces. The brine collects at the end of the last element and flows out of the pressure vessel. Product water passes through the membrane into the product water channel from both sides. The product water entering the mesh from the membrane flows spirally towards the central product water collection tube. At the very center of the element, the product water channel butts up against the holes in the product water collection tube. Water passes from the product water channel into the product water collection tube, and then flows out of the pressure vessels and finally into the product water piping. Disinfect this water and store it as potable product water.

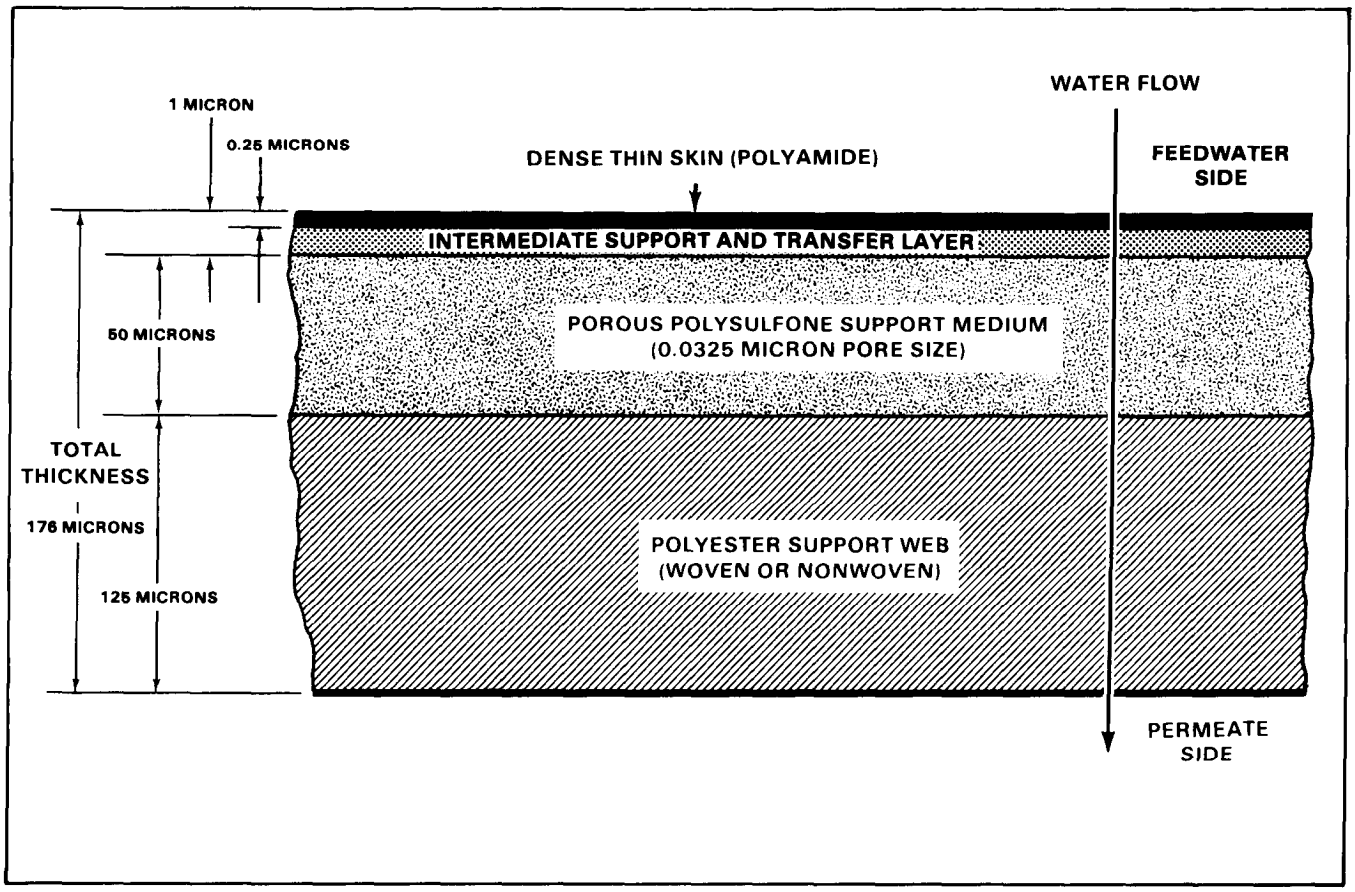

Figure 1-6. RO membrane composition

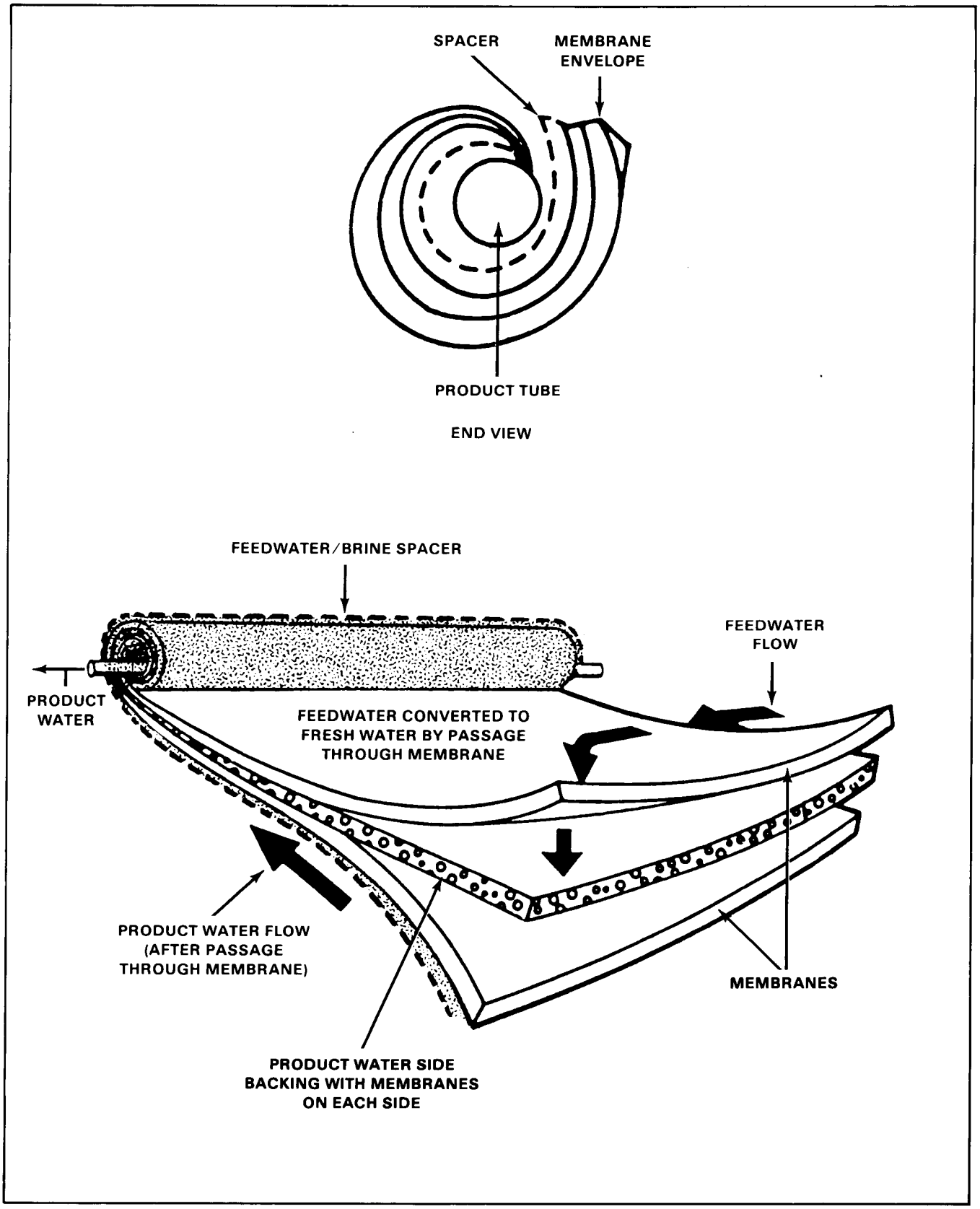

Figure 1-7. Spirally-wound RO membrane assembly

Feedwater does not seep into the product water channel because three sides of the leaf of two membrane sheets and the product water channel mesh are glued together. Two of the glued sides become the ends of the element. This isolates the product water channel from feedwater on one end of the element and brine on the opposite end. The third side becomes a seam which stops feedwater from reaching the product water channel without passing through the membrane. The mesh must protrude from this membrane sandwich on the remaining side so that it can butt up against the product water collection tube. Because of this arrangement, only water that has passed through the membrane can enter the product water channel mesh.

The wagon wheel-shaped plastic stems which extend from the central product water collection tube to the outside perimeter of the element are called antitelescoping devices. These stems form a frame which prevents telescoping of the membrane. Telescoping describes the condition when the feedwater spacer begins to extend beyond the membrane leaves at the ends of the element. Excessively high pressure operation of the RO purifier could lead to telescoping if not for these devices.

MEMBRANE FOULING

Undesirable characteristics of the feedwater ahead of the RO system may occur. These undesirable characteristics are called fouling. Calcium carbonate precipitation may cause fouling of the membranes. You can reduce this fouling by lowering the pH of the water and by applying an inhibitor, such as sodium hexametaphosphate. This will prevent or reduce precipitation fouling of the membrane surface. Fouling of RO membranes may be caused by colloidal suspensions, dissolved salts, or chemical/physical interactions.

Colloidal Suspensions

Colloidal solids in the influent may be trapped in the membrane. These solids may interfere with either the flow through the element, reducing the quantity of product water, or affect the rejection characteristics of the membrane, thereby reducing the quality of the product water.

Dissolved Salts

Dissolved salts in the influent may be concentrated by the membrane so that their volubility product is exceeded. This may result in precipitation of these salts on or near the membrane.

Chemical/Physical Interactions

Chemical or physical reactions between certain feed components and the membrane may cause fouling. Potential foulants are either colloidal materials or dissolved materials. The most common colloidal foulants are iron, manganese, silica, very fine clay minerals, iron bacteria, organics (humic and fulvic acid-type compounds), bacteria, and algae. The most common dissolved foulants are calcium and aluminum.

FOULING PREVENTION

There are several different ways to minimize the problem of membrane fouling.

You can pretreat the influent stream to remove the fouling materials before they reach the membrane. This pretreatment may be by precipitation, filtering, or activated carbon.

You can pretreat the influent stream to dissolve the fouling materials. The most common example is the injection of citric acid to prevent the formation of calcium carbonate.

You can pretreat the influent stream to suspend the fouling materials. An example of this pretreatment is the injection of a dispersant such as sodium hexametaphosphate.

PRETREATMENT

In order to avoid fouling of the membrane surface, you must pretreat the feedwater. This is done by the multimedia filter, aided by a coagulant, and the cartridge filter (micron filtration). The desired turbidity of the membrane feedwater is 1 JTU or less. Pretreatment reduces the frequency of cleaning of the elements to an acceptable level and reduces the effect of fouling so that the RO system will continue to produce potable water. The objective of pretreatment is to reduce the effect of fouling so that continuous RO water purification operations can meet mission requirements. For additional information on pretreatment, see Sections II and III of this chapter.

Section V

DISINFECTION

DISINFECTANT CRITERIA

Water must be disinfected to be considered potable. No other treatment process, or combination of processes, will reliably remove all disease-producing organisms from water. All methods of disinfection must satisfy the following criteria. The disinfectant should—

- Mix uniformly to provide intimate contact with potentially present microbial populations.
- Have a wide range of effectiveness to account for the expected changes in the conditions of treatment or in the characteristics of the water being treated.
- Not be toxic to humans at the concentration levels present in the finished water.
- Have a residual action sufficient to protect the distribution systems from microbiological growths and act as an indicator of recontamination after initial disinfection.
- Be readily measurable in water in the concentrations expected to be effective for disinfection.
- Destroy virtually all microorganisms.
- Be practical to use and maintain.

DISINFECTION AGENTS

Chlorine, ozone, and chlorine dioxide are disinfection agents. They are described in detail below.

Chlorine

Chlorine is the disinfectant agent usually specified for military use. Presently, this is the only widely accepted agent that destroys organisms in water and leaves an easily detectable residual that serves as a tracer element. Sudden disappearance of chlorine residual signals potential contamination in the system. No other available disinfectant is as acceptable or adaptable for potable water treatment operations as chlorine. A major disadvantage is that chlorine reacts with certain organic compounds to form trihalomethanes, a known carcinogen.

Types of hypochlorite. There are two types (dry and liquid) of hypochlorite. These are explained below.

Dry. Dry hypochlorites added to water form hypochlorite solutions containing an excess of alkaline material, which tend to increase the PH. If the pH of the hypochlorite and water mixture rises high enough, calcium in the water and in calcium hypochlorite precipitates as calcium carbonate sludge. If this occurs, allow the hypochlorite and water mixture to stand so that the calcium carbonate may settle out. After the liquid hypochlorite solution settles, decant it into a separate tank for use. Two dry hypochlorites are calcium hypochlorite and lithium hypochlorite. HTH products contain about 70 percent available chlorine and 3 to 5 percent lime. Calcium hypochlorite is available in granular, powdered, or tablet forms and is readily soluble in water. Ship granular and tablet forms in 35-or 100-pound drums, cases, or smaller reusable cans. This is the form of chlorine found most often in Army water purification operations. Lithium hypochlorite contains about 35 percent available chlorine, readily dissolves in water, and does not raise the pH as much as other hypochlorite forms. Lithium hypochlorite is available in granular form. It is generally used for disinfecting swimming pools.

Liquid. The liquid solutions are clear, light yellow, strongly alkaline, and corrosive. They are shipped in plastic jugs, carboys, and rubber-lined drums of up to 50-gallon volumes. Sodium hypochlorite is available commercially in liquid form, such as Clorox. Household bleach is a sodium hypochlorite solution containing about 5 percent available chlorine. The usual concentration of sodium hypochlorite is between 5 and 15 percent available chlorine. Addition of sodium to drinking water may be hazardous to persons with hypertension or on low- or no-sodium diets.

Storage. High-test hypochlorites are relatively stable. Storage at temperatures below 86°F reduces the rate of deterioration. Unlike calcium hypochlorite, which can be stored for up to a year, sodium hypochlorite solution has a shelf life of only 60 to 90 days. Store sodium hypochlorite solutions in dry, cool, and darkened areas or in containers protected from light. Store hypochlorite solutions in rubber-lined or PVC-lined steel tanks fed through fiberglass, saran-lined, or

PVC piping. Do not store or use dry hypochlorite in the presence of oil because of the fire potential.

Ozone

Ozone is an unstable form of oxygen that kills organisms faster than chlorine. Ozone, as a disinfection agent, is less influenced by pH and water temperature than chlorine. Another advantage of ozone is that it does not form compounds that create or intensify odors in the water. The main disadvantage of ozone is that it provides no lasting residual disinfecting action. Also, because of its instability, ozone is usually generated at the point of use. The process is not as adaptable to variations in flow rate and water quality as chlorine.

Chlorine Dioxide

Chlorine dioxide is a red-yellow gas or liquid with a very irritating odor. It has over 2 1/2 times the oxidation capacity of chlorine; but its rate of reaction is slower, and the mechanism of disinfection is completely different. It is effective over a broad pH range (5 to 9) and is not affected by sunlight. A major advantage of chlorine dioxide is that it does not hydrolyze in water and will not react with organic compounds to form trihalomethanes.

CHLORINATION EFFECTIVENESS

Use chlorination for disinfection of potable water in all cases with the exception of individual or small unit water purification for which you can use iodine tablets. The efficiency of chlorine disinfection is affected by the following variables.

A combination of the form of chlorine present, the pH of the water, and the contact time. As the pH of the water increases from 5 to 9, the form of the chlorine residual changes from hypochlorous acid to hypochlorite ion, which is less effective. The most effective disinfection occurs when the pH is between 5.5 and 6.5. At the same pH, a longer contact time also results in increased disinfection. Contact time is the time elapsing between the introduction of the chlorine and the use of the water. The required contact time is inversely proportional to residual, within normal limits. If the residual is halved, the required contact period is doubled. Army standards specify a minimum of 30 minutes contact time before product water is tested for residual to determine potability. A residual of 5 ppm must be maintained for water to be potable.

The type and density of organisms present (virus, bacteria, protozoa, helminth, or other) and their resistance to chlorine. Bacteria are most susceptible to chlorine disinfection whereas the cysts of the protozoa Entamoeba histolytica and Giardia lamblia are the most resistant.

The temperature of the water. At lower temperatures, the microorganism kill rate tends to be slower, and you need higher chlorine residuals or longer contact times. You obtain greater disinfection efficiency in warm water than in cold water. Longer contact time or increased chlorine dosages are required when the water temperature is low. Effectiveness of free chlorine at 35°F is about half of that at 70°F.

The concentration of substances other than disease-producing organisms that exert a chlorine demand. During disinfection, chlorine demand can be exerted by chemical compounds such as those containing ammonia and organic material. When these reactions occur, the chlorine is not available for disinfection. Chlorine demand is chlorine required to react with chlorine-destroying compounds. You must satisfy chlorine demand before disinfection can begin. Some of the compounds in water that exert a chlorine demand include iron, manganese, hydrogen sulfide, ammonia, and miscellaneous organic compounds. Add sufficient chlorine to the water supply to satisfy the chlorine demand, in addition to the amount required for actual disinfection.

Adequate mixing of chlorine and chlorine-demanding substances. Thoroughly mix the disinfecting agent to ensure that all disease-producing organisms come in contact with the chlorine for the required contact time.

The suspended solids concentration. Suspended solids can surround and protect organisms from the disinfectant.

CHLORINATION TREATMENT

Chlorination treatment consists of combined residual chlorination, free residual chlorination, and breakpoint chlorination. These treatments are described below.

Combined Residual Chlorination

Combined residual chlorination involves applying chlorine to water to produce a combined available

chlorine residual and to maintain that residual through the water treatment and distribution operations. Combined available chlorine forms are less effective as disinfectants than free available chlorine forms. You need about 25 times as much combined available residual chlorine to obtain equivalent bacterial kills as required for free available residual chlorine under the same conditions of pH, temperature, and contact time. You need about 100 times longer contact time to obtain bacterial kills for equal amounts of combined versus free available chlorine residuals under similar conditions. You can use combined residual chlorination to control algae and bacterial aftergrowth in potable water distribution systems. Combined chlorine residuals can maintain a stable residual throughout the system to the point of usage at the distribution point. In some cases, you can use free residual chlorination to ensure effective disinfection, followed by the addition of ammonia to convert the free residual to a combined available residual.

Free Residual Chlorination

Free residual chlorination involves producing a free available chlorine residual through part or all of the water treatment and distribution operations. You can form free available chlorine residuals by applying chlorine to water, if the water contains no ammonia or other nitrogenous materials. If the water contains ammonia and combined available chlorine residuals are formed, add sufficient chlorine to destroy the combined chlorine residual. Free residual chlorination provides initial disinfection with a contact period of about 10 minutes, whereas combined chlorine residual requires at least 60 minutes. Changes in pH and temperature do not markedly affect the disinfecting powers of the free chlorine residual. A combined chlorine residual must be increased significantly with increases in pH and decreases in temperature. You can diminish taste and odors by using free residual.

Breakpoint Chlorination

Breakpoint chlorination is the application of chlorine to produce a residual of free available chlorine with minimum combined chlorine present. Adding chlorine to water with ammonia forms chloramines. With additional application, chlorine residuals increase and reach a maximum when the ratio of chlorine to ammonia is equal. As you apply greater dosages of chlorine and the ratio of chlorine to ammonia increases, you oxidize ammonia by the chlorine and reduce the chlorine residual. When you add approximately 10mg/L of chlorine for each mg/L of ammonia present, chloramine residuals decline to a minimum value. This is the breakpoint and represents a point where further addition of chlorine produces a free residual (Figure 1-8, page 1-19). The actual amount of chlorine required to arrive at the breakpoint varies between 7 and 15 times the ammonia nitrogen content of the water. Due to the presence of organic and other chlorine reactive materials, however, you may need 25 times as much chlorine as ammonia nitrogen content to reach breakpoint. Beyond breakpoint, the residual should have at least 90 percent free available residual chlorine. The rate of the breakpoint reaction appears to be most rapid between a pH of 7 and 8, and it increases with a higher temperature. At pH levels below 8, you can form nitrogen trichloride following breakpoint treatment and impart odors to the water. You must expose the water to air to provide for the release of nitrogen trichloride.

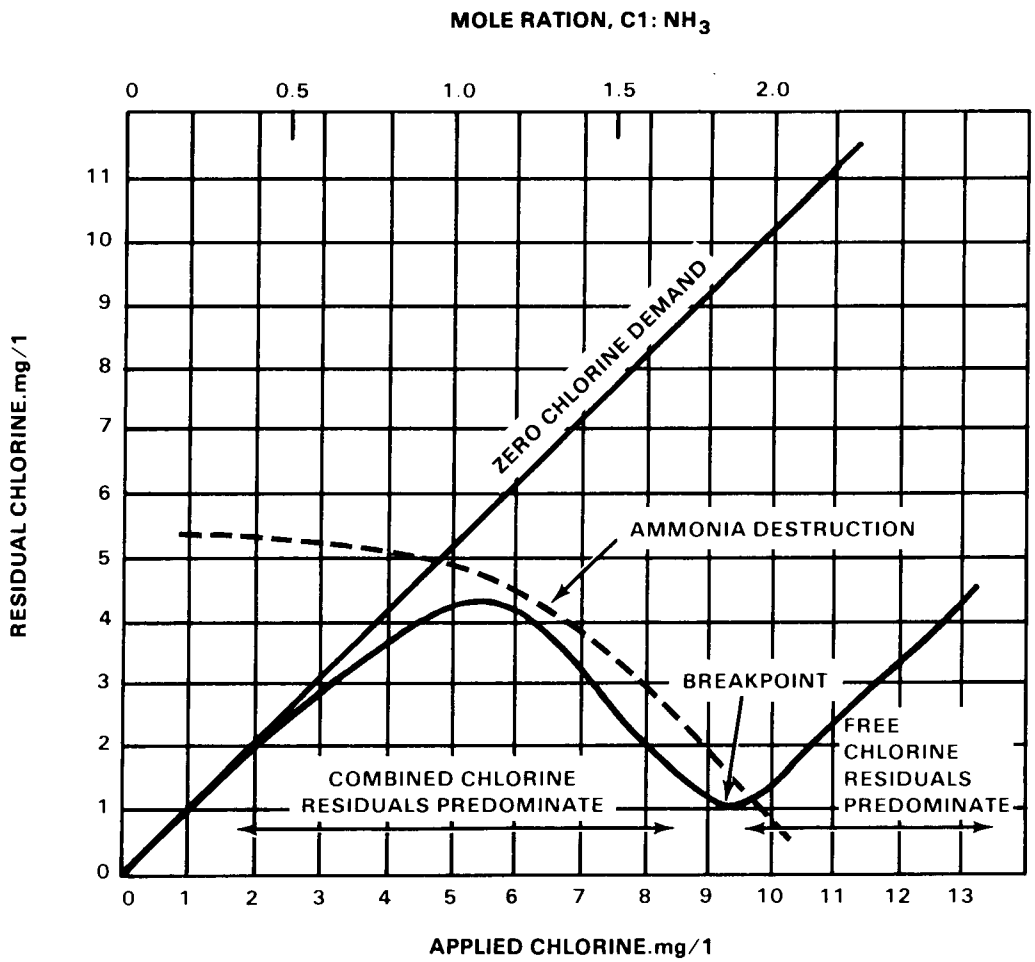

Figure 1-8. Breakpoint chlorination chart

CHAPTER 2

Water Reconnaissance

Section I

RESPONSIBILITIES AND PLANNING

RESPONSIBILITIES

The MMC in the DISCOM, COSCOM, and TAACOM is responsible for providing detailed information concerning the status of water supply throughout its respective areas to the supporting water unit. The supporting water unit, in coordination with the appropriate MMC and rear area terrain manager in the rear CP, directs the water supply section leader to seek new water supply operational sites in support of tactical combat operations. The water supply section leader is responsible for supervising and performing reconnaissance of new operational sites for water supply operations. Water reconnaissance is a special type of survey made to gather information about potential water purification sites and bulk water storage and distribution sites.

PLANNING

Proper planning is essential to site selection and should be foremost in the minds of the reconnaissance personnel. The planning for a water supply site, whether it be for purification or storage/distribution, begins with mission guidance from the tactical commander. Project water requirements to support deployed forces and assign an operational area. For more information on computing unit daily water needs, see FM 10-52, Chapter 3. Whenever possible, include water supply operations within larger logistics complexes, bases, or base clusters. At the very least, laundry, bath, and personnel decontamination units should be near water supply operations for mutual support. To enhance resupply operations, collocate Class I and water points.

Reconnaissance Team

The water section leader may supervise the site reconnaissance, or he may direct one of his water purification NCOs to lead the team. In either case, a water treatment specialist, MOS 77W, must be present. A representative of the command surgeon should be present on the reconnaissance, if possible. A water detection team from the Corps of Engineers may be available. They have access to the water resource data base. This data base can provide detailed surface and ground hydrologic information for selected areas of the world.

Equipment

On reconnaissance for purification sites, take the WQAU and the WQAS-E. During this type of reconnaissance, analyze the raw water for turbidity, TDS, pH, and temperature. On reconnaissance for storage and distribution sites, you do not need specific equipment. However, the team must know the size of, and level requirements for, the PWS/DS.

Intelligence

The G2/S2 is the source for information concerning ground/air reconnaissance and surveillance, imagery (photos), human intelligence from interrogations of EPWs, and other sources of

terrain and technical intelligence. Also, the G2/S2 provides fallout predictions from enemy-employed nuclear weapons and coordinates chemical agent detection, biological agent sampling, and radiological surveys with the chemical section. Finally, the G2/S2 coordinates and consolidates the requirements for weather and terrain analysis support.

Section II

AIR/GROUND SITE RECONNAISSANCE

AIR RECONNAISSANCE

When time permits and equipment is available, the G3/S3 may decide to have an air reconnaissance before the ground survey. This may be done with any type of aircraft. It is an effective, reliable means to get data quickly on sources over a large area. A visual or photographic air survey may disclose changes not shown on maps. On the way to possible sites, the reconnaissance team should note routes of communication, cover, and concealment and protection from encirclement, infiltration, or attack. The ground reconnaissance can confirm the observations of the area. If you use a helicopter for the air reconnaissance, complete the air and ground surveys at the same time if the proposed sites are within secured areas and the terrain permits the helicopter adequate landing space. Air reconnaissance is limited by bad weather, available aircraft, and security problems.

GROUND RECONNAISSANCE

Ground observation is the only sure way to get accurate data for selection of a water point. A sketch of the site made during the ground reconnaissance and keyed to a map can be invaluable. Memory is not enough. Take notes. Whenever possible, complete DA Form 1712-R while the reconnaissance team is still at the site. Detailed information on potential sites is the most important goal.

PURIFICATION SITE RECONNAISSANCE

Water quantity, water quality, accessibility, and site conditions are important requirements for a purification site. They are discussed below.

Water Quantity

Ignore seasonal changes in water quantity unless the information is readily available from native sources or contained in the water resources data base available through the Corps of Engineers. Since reconnaissance teams do not have flow gauges, meters, and measuring devices, use an improvised method to collect data on water flow. The field method is to measure the average cross-sectional area and average velocity of the stream. The formula for calculating the quantity of water is in Appendix A. During the winter in cold regions, reconnaissance teams should use ice augers to determine ice thickness on a potential source. Augers are quicker and safer than axes. The team should also measure the depth of water under the ice. In doing this, the team should measure the depth at several spots because of the variations in the beds of shallow streams and rivers in Arctic regions. Rocky plateau deserts may be cut by dry, steep-walled eroded valleys known as wadis in the Middle East and arroyos or canyons in the United States and Mexico. The narrower of these valleys can be extremely dangerous to men and materiel due to flash flooding after rains, although their flat bottoms and potential for water may be superficially attractive as possible sites.

Water Quality

Water should be of such quality that it can be approved by medical personnel as meeting raw water standards and at the same time be readily purified with assigned water purification equipment. Take four of the five principle analysis tests of water (temperature, turbidity, TDS, pH) for each proposed water purification site. To be considered as a potential water purification site, the raw water must meet the minimum requirements established in TB MED 577. Additionally, check the water source for a distance of two miles for possible sources of pollution and evidence of contamination. Do not locate water purification operations near areas where—

- Sources of pollution exist, such as landfills, agricultural and livestock wastes, industrial and domestic sewage discharges, and POL storage or distribution sites.
- Evidence of contamination exists, such as dead fish or vegetation, excessive algae growth, oil slicks, and sludge deposits.

Accessibility

A water point must be accessible to vehicles and personnel. It should have a good road net with turnarounds, cover and concealment at the water source and distribution area, and an adequate parking/staging area. The roads should be able to withstand, under all weather conditions, the heaviest vehicles using the water point. The purification site should be on a through road when possible, but it should not be on the MSR.

Site Conditions

Where competing potential purification sites meet all the requirements noted above, base your selection of the actual location on the condition of the sites. Consider drainage, security, and adequacy of the bivouac area in that order of importance.

Drainage. The site should be on high, porous ground. Establish the potential for seasonal flooding. The area proposed for the purification equipment must be level. The slope must allow for drainage away from operations, but the distance and degree of slope must be within the raw water pump's capability to provide sufficient flow to the purifiers.

Security. The site should provide cover and concealment. It should be a safe distance from prime artillery and aerial targets. The site should provide security against ground attack and sabotage.

Support required. Water point personnel and security forces need a bivouac area. Factors in site selection are security, facilities, sanitation, and comfort of the troops. The reconnaissance team may not be able to find a site that meets all of these needs. The bivouac area must be at least 100 feet downstream from water purification operations. FM 21-10 gives detailed information on field sanitation for bivouac operations. When practical, water treatment personnel should bivouac as near the water point as possible. This would ensure their availability for work or emergencies.

STORAGE AND DISTRIBUTION SITE RECONNAISSANCE

The reconnaissance for a PWS/DS must consider cover and concealment, road nets, dispersion factors, terrain, and site preparation needs. The site must be suitable for the PWS/DS layout. You may be assigned an area of operation, but you must choose the PWS/DS site within that area. You should locate the PWS/DS as close to supported units as dispersion factors, sources of supply, and the tactical situation permit. Use vacated forward sites or existing facilities when you can.

Terrain

The site you choose should be reasonably level and well drained to prevent water from impeding resupply operations. Look for a tank site without slopes, if possible. A large slope may cause filled tanks to roll sideways, backwards, or forward. Put the pumps and hypochlorinators on level ground. Try to place discharge pumps at a lower level than the collapsible tanks to have good suction to the pump.

Security

Concealment is important, also. Select a site that gives adequate cover from enemy observation and attack. Select a site for the collapsible tanks, pumps, and hypochlorinators that is in the woods or in a tree line where the natural shadows disguise the telltale shapes.

Road Nets

Your site should be large enough to meet the needs of supply and distribution plans but not so large that handling operations become inefficient. The site should have easy access to road nets, and at least one road should run through the supply point. However, do not choose a site that is close to important communication and population centers. They are, in most cases, potential enemy targets. There should be two large areas (one in front and one in the rear) for truck parking.

Site Preparation

You may have to expand the supply point. The site you choose should have enough space to add more

collapsible tanks and truck parking areas. The three major items of equipment in the PWS/DS are the collapsible tanks, the pumps, and the hypochlorinators. Slope the tank sites gently away from the input side of the tank to help drain the tanks when they are removed. The slope for the tank sites can be no more than 3 inches for every 100 feet.

Section III

REPORTS AND DATA SOURCES

REPORTS

Complete DA Form 1712-R for each site surveyed. The supervisor of the reconnaissance team will forward completed forms to the G3/S3 of the tasking unit. Survey an average of three sites for each proposed water point when possible. DA Form 1712-R will be locally reproduced on 8 1/2- by 1 l-inch paper. A copy for reproduction purposes is located at the back of this manual. Figure 2-1 (page 2-5) shows a sample completed form. The report is divided into four sections as follows.

Identification Data

These blocks identify date and time of reconnaissance, the person and unit conducting the reconnaissance, the person and unit receiving the report, and map location of the proposed site.

Water Quantity and Quality Data

These blocks record the following characteristics: type of source, TDS, temperature, turbidity, pH test, and quantity (estimate of total volume or flow rate).

Site Conditions

These blocks record the following site conditions: security (to include cover and concealment, avenues of approach, fields of fire); soil type and drainage; terrain; bivouac potential; and road nets (to include distance from MSR).

Proposed Site Layout

This section uses the form for a sketch of the proposed water point. The sketch must include: location of major pieces of equipment (pumps and purifiers), location of MSR, type and flow of water source, key terrain features, location of bivouac, and distribution plan/route.

DATA SOURCES

Use historical water reconnaissance report forms as guides in planning for future operations. The IPB is an excellent source of information in planning for and conducting water reconnaissance. The G2/S2 has staff responsibility for conducting the IPB. This involves the collection and processing of data, conversion of data into intelligence, and dissemination of this intelligence. This collection and processing activity includes aerial and ground reconnaissance and surveillance; IMINT; HUMINT, including interrogation of EPWs, civilian internees and/or detainees, and refugees; debriefing returned, captured US personnel, escapees, and evaders; exploitation of captured documents and captured materiel; SIGINT; and employment of long-range reconnaissance patrols. All of these are sources of data on the location and availability of potential water supplies, both naturally occurring raw water and man-made facilities.

WATER RECONNAISSANCE REPORT

For use of this form, see FM 10-52-1, the proponent agency is TRADOC

DATE	TIME OF RECONNAISSANCE
11 Feb 91	0900

REPORTED BY *(Name, grade, organization)*
Dave Schneider, SGT, 20 S+S Co. Water Platoon

FORWARDED TO *(Name and Organization)*
Platoon Leader, 20 S+S Co

MAP COORDINATES OF WATER SOURCE QA 437539

1. **Quality-Quantity**

TYPE OF SOURCE	TDS	TEMPERATURE
River	500	60°
TURBIDITY *(Estimate)*	**pH TEST**	**QUANTITY**
10	5	30,000 GPH

2. **Site Conditions**

SECURITY
Good cover and concealment, .5 KM from MSR.

DRAINAGE-SOIL TYPE
Muddy banks, clay soil, poor drainage.

TERRAIN
Dense vegetation, flat landscape.

BIVOUAC
Sufficient area for bivouac downstream.

DISTANCE TO CONSUMERS	ROADS
10 KM	Gravel road to site – .5 KM MSR asphalt

3. SKETCH OF AREA *(Show road net and traffic circulation.) (Use reverse side for additional sketches, if necessary.)*

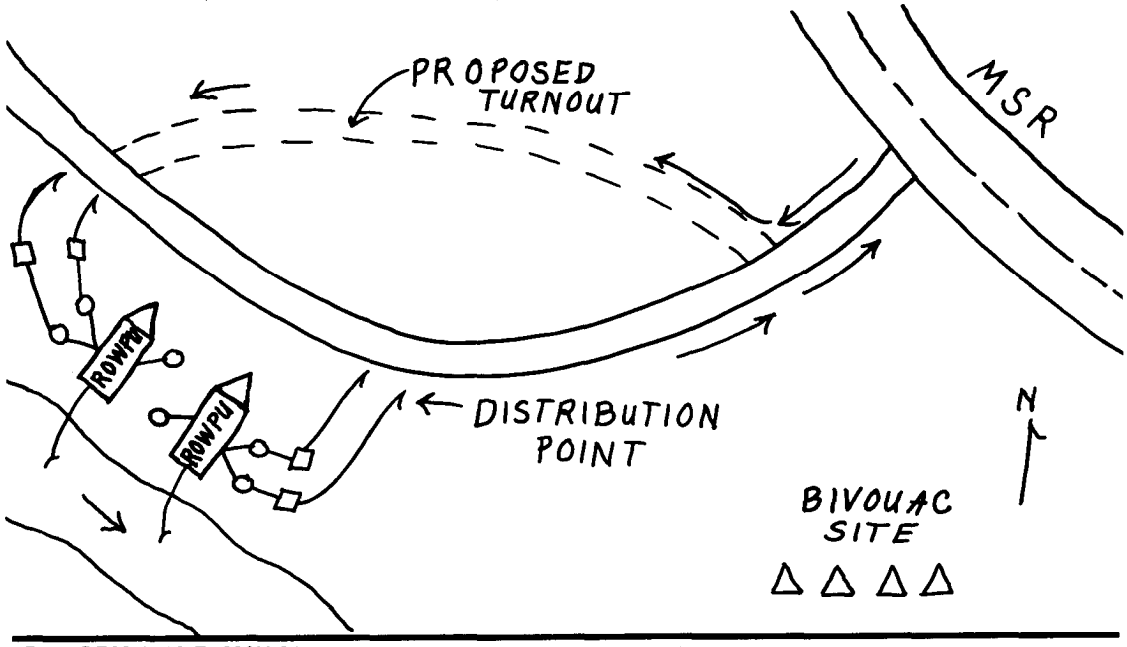

DA FORM 1712-R, MAY 91 EDITION OF FEB 85 IS OBSOLETE

Figure 2-1. DA Form 1712-R, Water Reconnaissance Report

CHAPTER 3

Water Source and Water Point Development

Section I

DEVELOPMENT OF WATER SOURCES

BASIC GUIDELINES

Development of a water source includes all work which increases the quantity of water, improves its quality, or makes it more readily available for treatment and distribution. Avoid elaborate developments. Also, do not make a temporary source permanent until you survey the area for a source requiring less work. Finally, regardless of the type of source and climate, there are several things to consider in the development of intake points. These considerations involve both intake hoses and pumps.

Intake Hoses

All intake hoses or pipes should have an intake screen regardless of how clear the water is. Protect suction screens from floating debris which may damage, clog, or pollute them. Proper anchorage of suction lines and screens prevents puncture of kinked lines, damage to the screen, and loss of prime. Also, water at the intake point should be as clear and deep as possible. The screen on the suction hose must be at least 4 inches below the water level. This helps to keep the screen from becoming clogged with floating debris. It also prevents loss of prime from air getting into the suction line.

Pumps

The practical limit of suction lift of raw water pumps issued with field water purification equipment is 25 feet at sea level. Suction lift decreases at higher altitudes. Also, the pumps must create a partial vacuum in the suction line. Therefore, the raw water intake hose must be airtight for the pump to work properly.

DEVELOPMENT OF INLAND WATER SOURCES

There are a number of development considerations and techniques which apply to inland types of water sources. They are discussed below.

Surface Water Source

Inland surface water is the most accessible type of water source. This source lends itself readily to the purification equipment common to quartermaster units. Surface water is the most easily developed source of water. There are various methods of constructing intake points for inland surface water sources.

Rocks and stakes. If the source is a stream and the stream is not too swift and the water is sufficiently deep, prepare an expedient intake by placing the intake screen on a rock. This will prevent clogging of the screen by the stream bed and provide enough water overhead to prevent the suction of air into the intake screen. If the water source is a small stream or shallow lake, secure the intake hose to a post or pile as shown in Figure 3-1 (page 3-2).

Pits. When a stream is so shallow that the intake screen is not covered by at least 4 inches of water but the source must be used, a pit should be dug and the screen laid on a rock or board placed at the bottom of the pit. Line pits dug in streams with clay or silt bottoms with gravel to prevent dirt from entering the purification equipment (Figure 3-2, page 3-2). Surround the screen with gravel to prevent collapse of the sides of the pit and also to shield the screen from damage by large floating objects. The gravel also acts as a coarse screen for the water. Provide a similar method by enclosing the intake screen in a bucket as shown in Figure 3-3 (page 3-3).

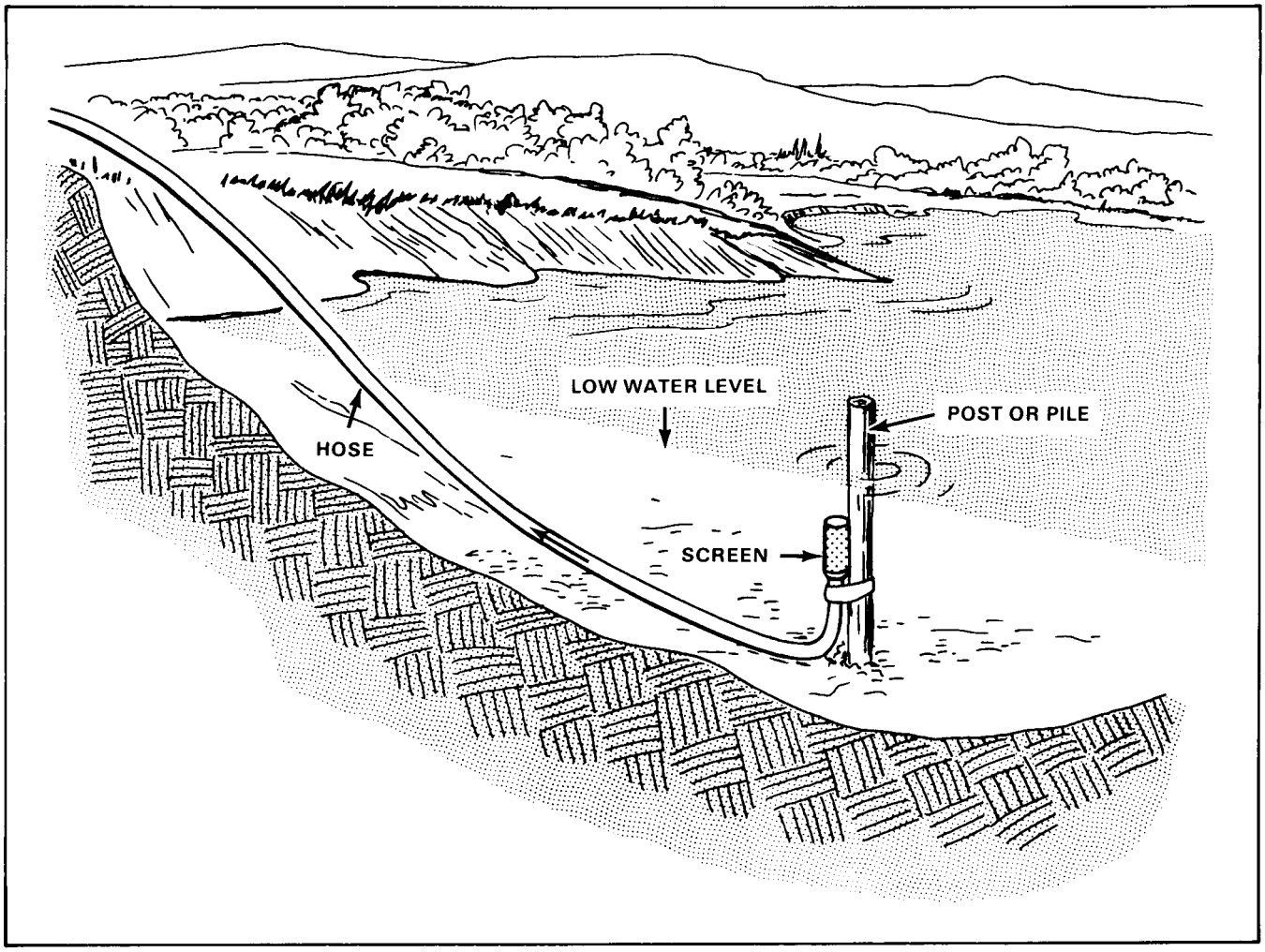

Figure 3-1. Intake hose secured to a post

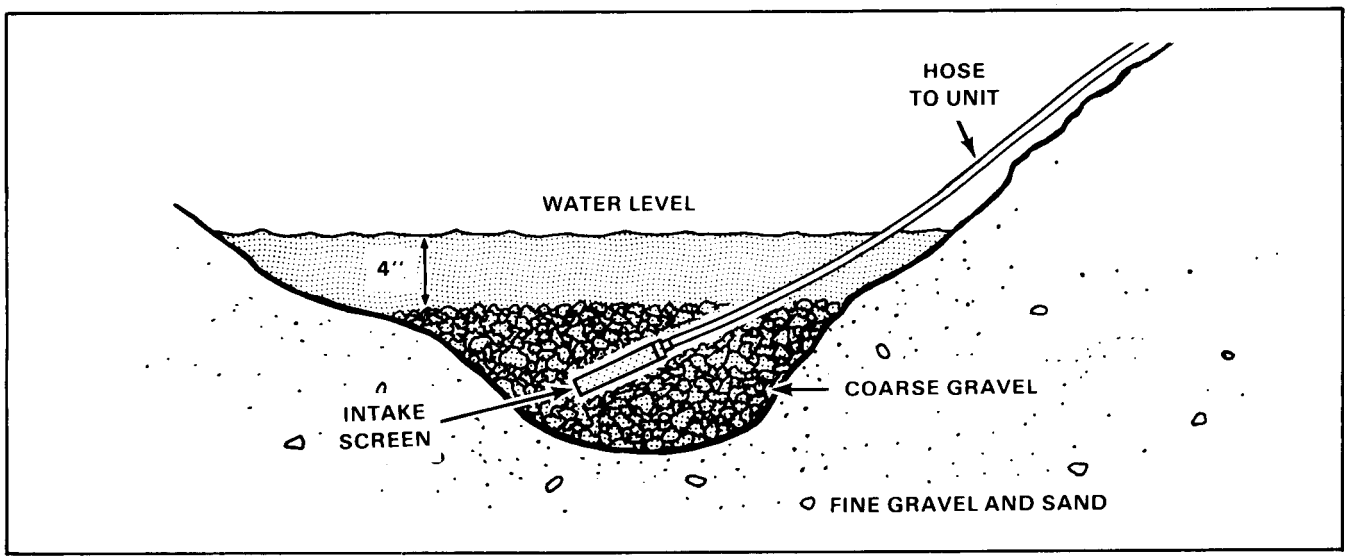

Figure 3-2. Surface intake with hose buried in gravel-filled pit

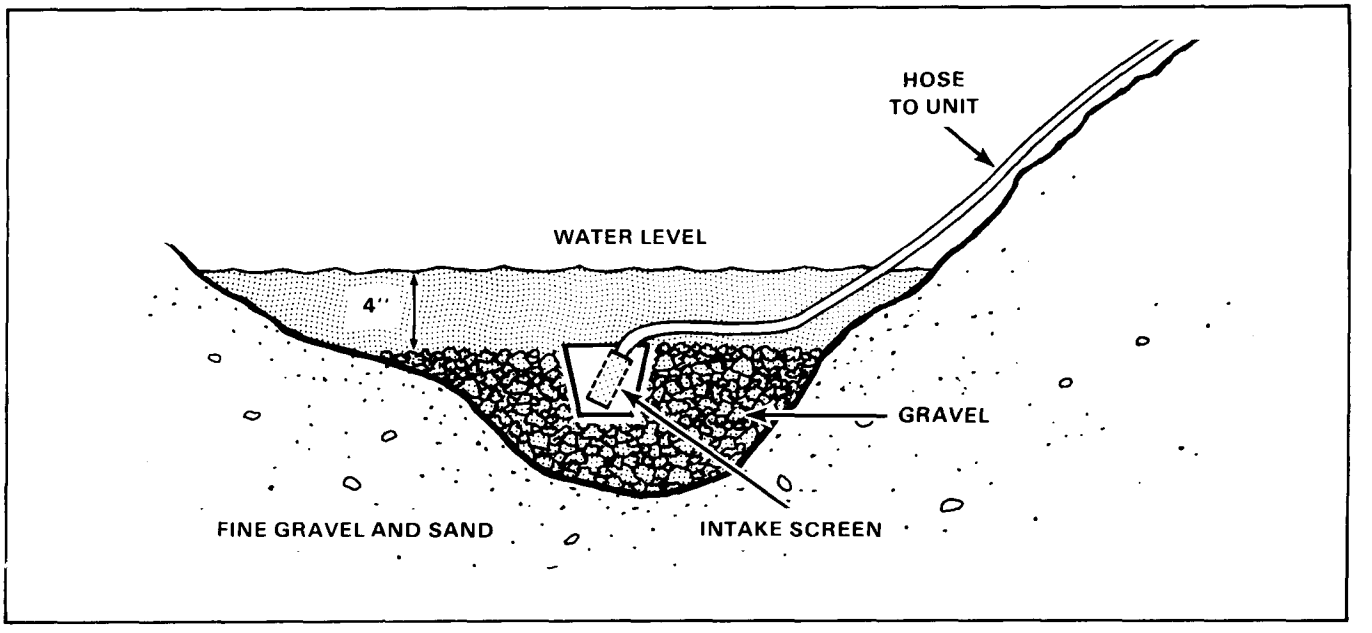

Figure 3-3. Use of bucket on end of surface intake

Dams. Raise the level of the water in small streams to cover the intake screen by building a dam as shown in Figure 3-4 (page 3-4). In swift flowing streams, construct a wing or baffle to protect the intake screen without impounding the water (Figure 3-5, page 3-4).

Floats. In addition to floats provided with the purification equipment, use floats made of logs, lumber, sealed cans, or empty drums to support the intake screen in deep water. They are especially useful in large streams where the quality of the water varies across its width or where the water is not deep enough near the banks to cover the intake screen. Cover the intake with an adequate depth of water by anchoring or stationing the float at the deep part of the stream. Secure the intake hose to the top of the float, allowing enough slack for movement of the float. If you use support lines to secure the float to the banks, alter the position of the float to correspond to changes in depth by manipulation of the lines. The chief advantage of a float intake is the ease with which the screen can be adjusted vertically. Figures 3-6 and 3-7 (page 3-5) show two types of improvised floats.

Galleries. Engineer units can improve the quality of water from muddy streams by digging intake galleries along the bank (Figure 3-8, page 3-6). To do this, they dig a trench along the bank. The trench must be deep enough to allow the water from the stream to seep into it and to intercept ground water flowing toward the stream. They fill the trench with gravel to keep the sides from collapsing. Then they place the intake screen in the gravel below the waterline. A gallery requires a lot of work, but it may be worth it. It reduces the amount of chemicals needed for coagulation, extends the life of filter cartridges, and extends the filter run between backwashing.

DEVELOPMENT OF GROUND WATER SOURCES

When surface water supplies are inadequate or unusable, develop ground water supplies. Subsurface or ground water is water existing below the earth's surface. In most regions the ground is saturated with water to a depth that depends largely on the type of rocks and soil, the amount of rainwater, and the topography of the land. This is the water table. The water table is not a level surface, but it is irregular and reflects the surface features, rising high under the hills and falling back low under flat areas (Figure 3-9, page 3-6).

Aquifers

An aquifer is a layer of rock below the water table from which you obtain water. It is sometimes referred to as a water-bearing formation or water-bearing stratum. Aquifers can be found in almost any area.

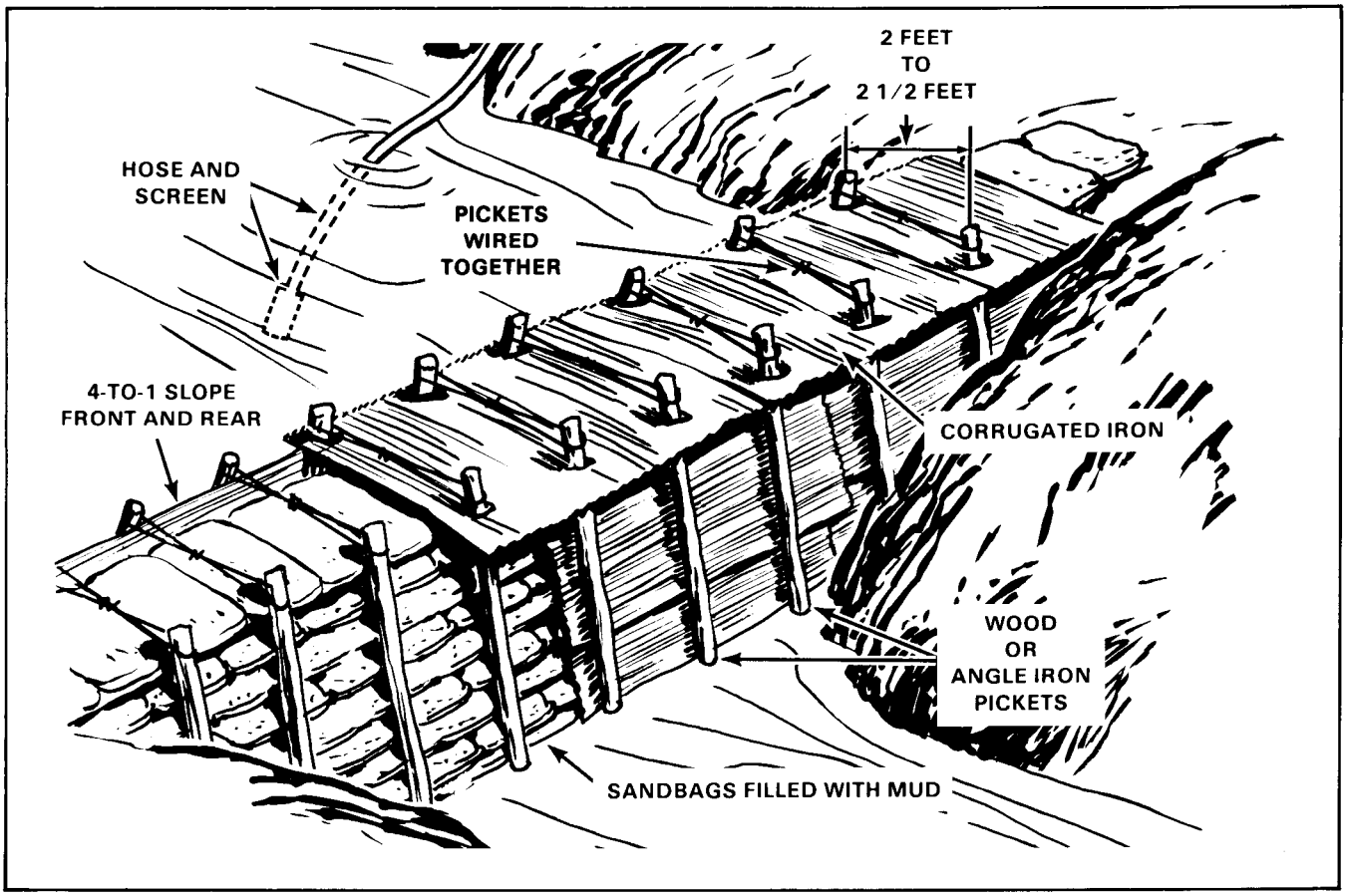

Figure 3-4. Improvised dam for impounding small streams

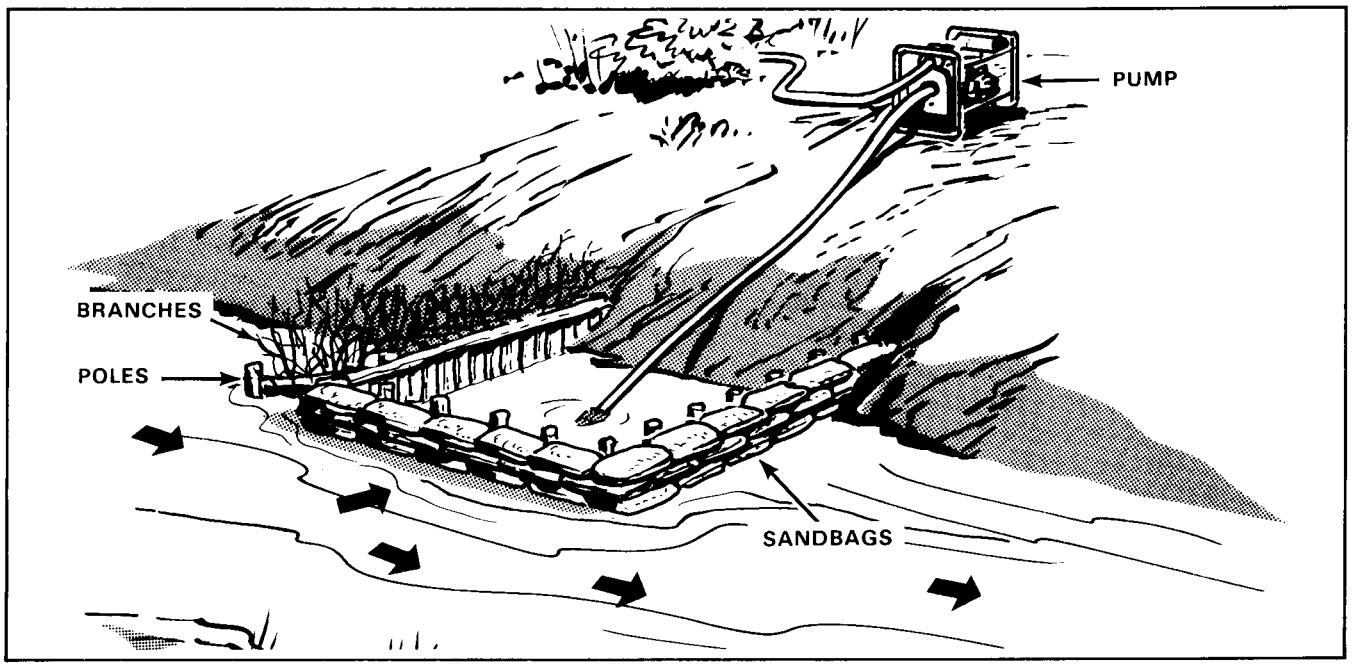

Figure 3-5. Baffle dam for protecting intake screen

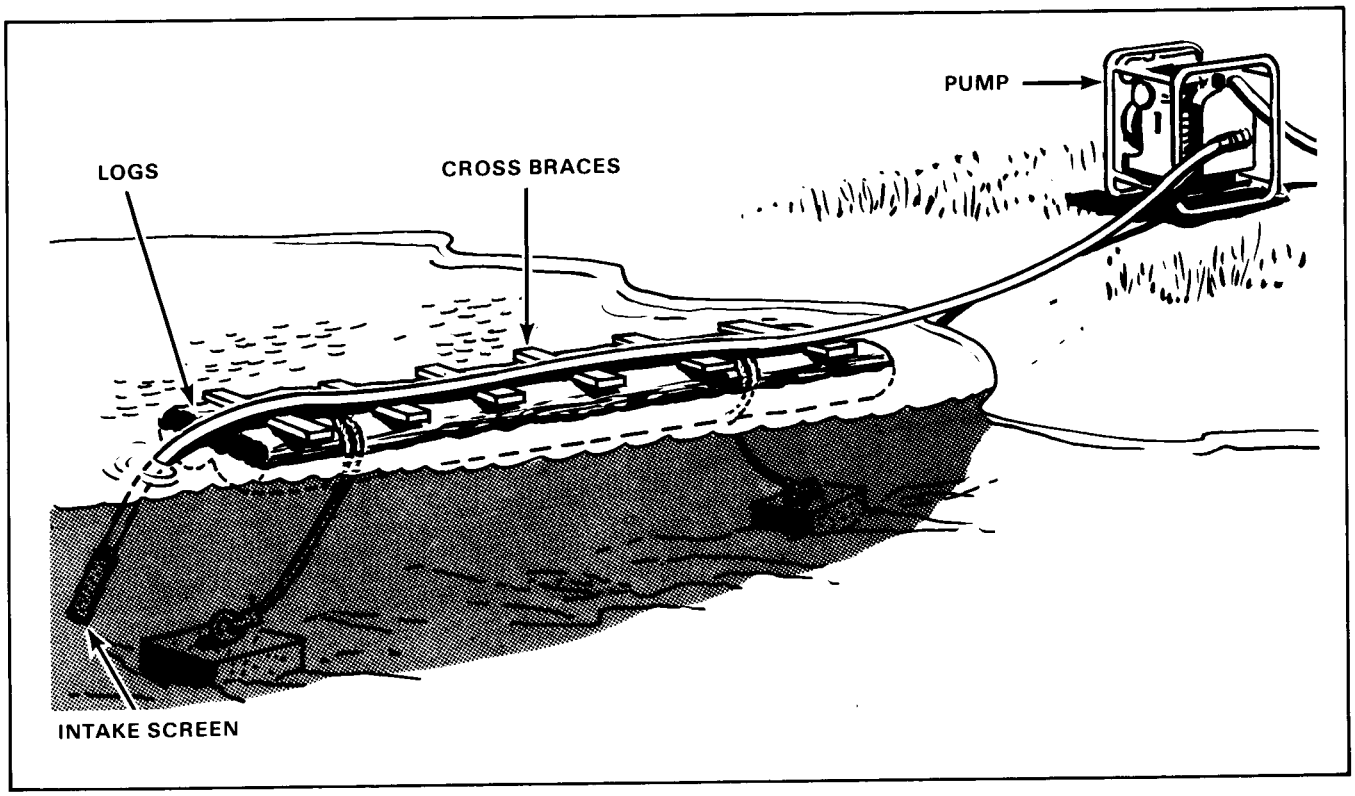

Figure 3-6. Float surface intake with logs

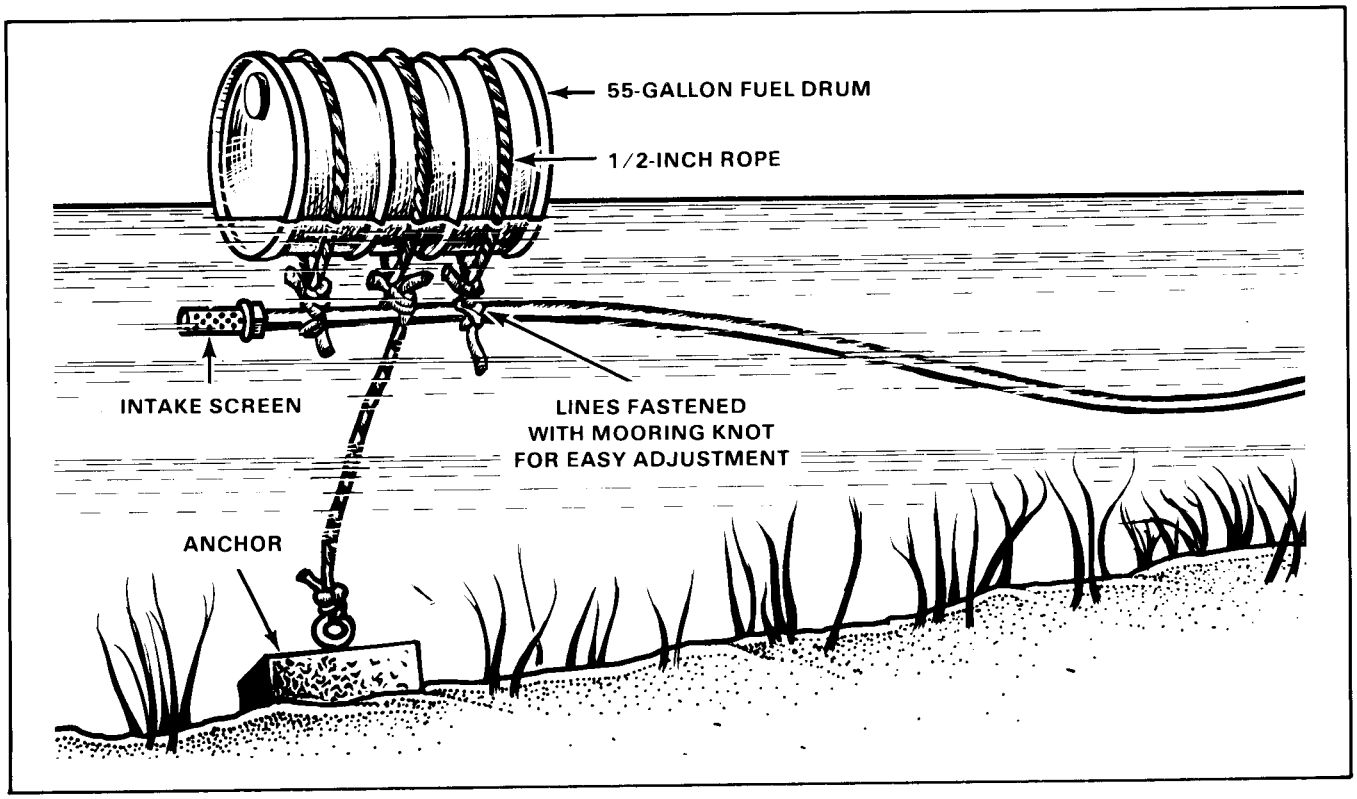

Figure 3-7. Float surface intake with empty drum

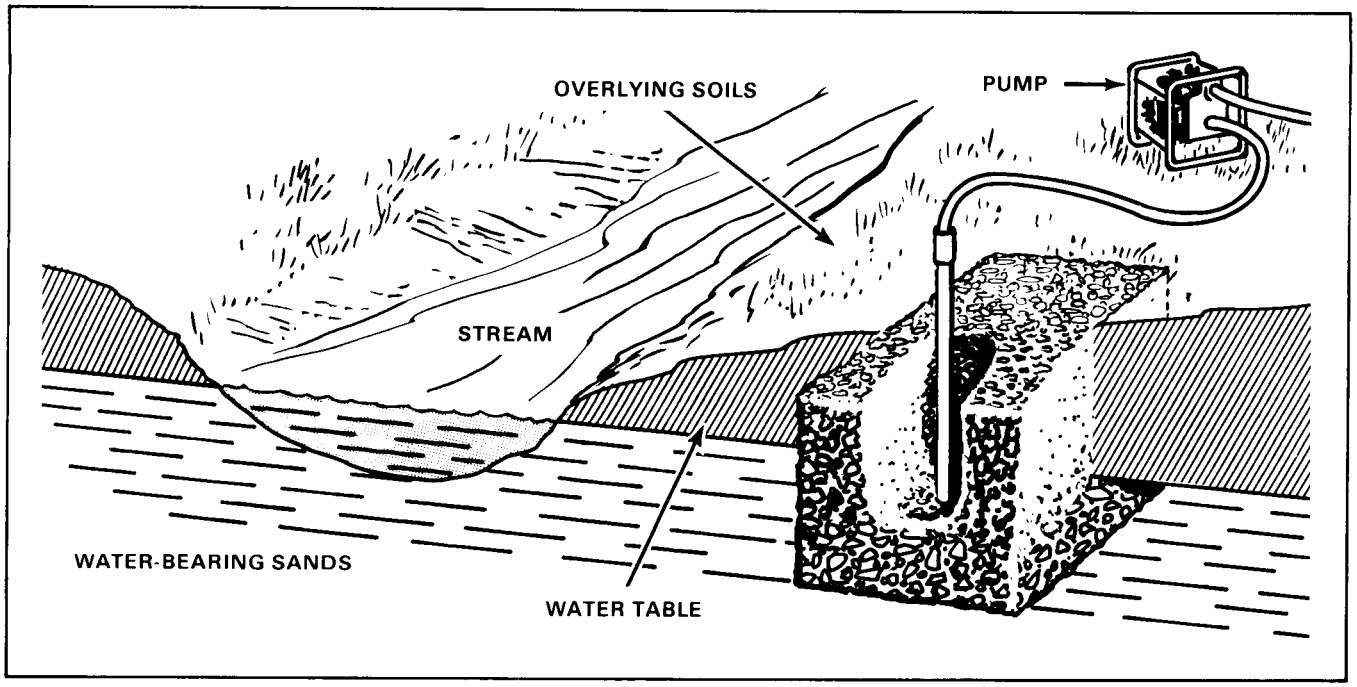

Figure 3-8. Gravel-filled gallery intake

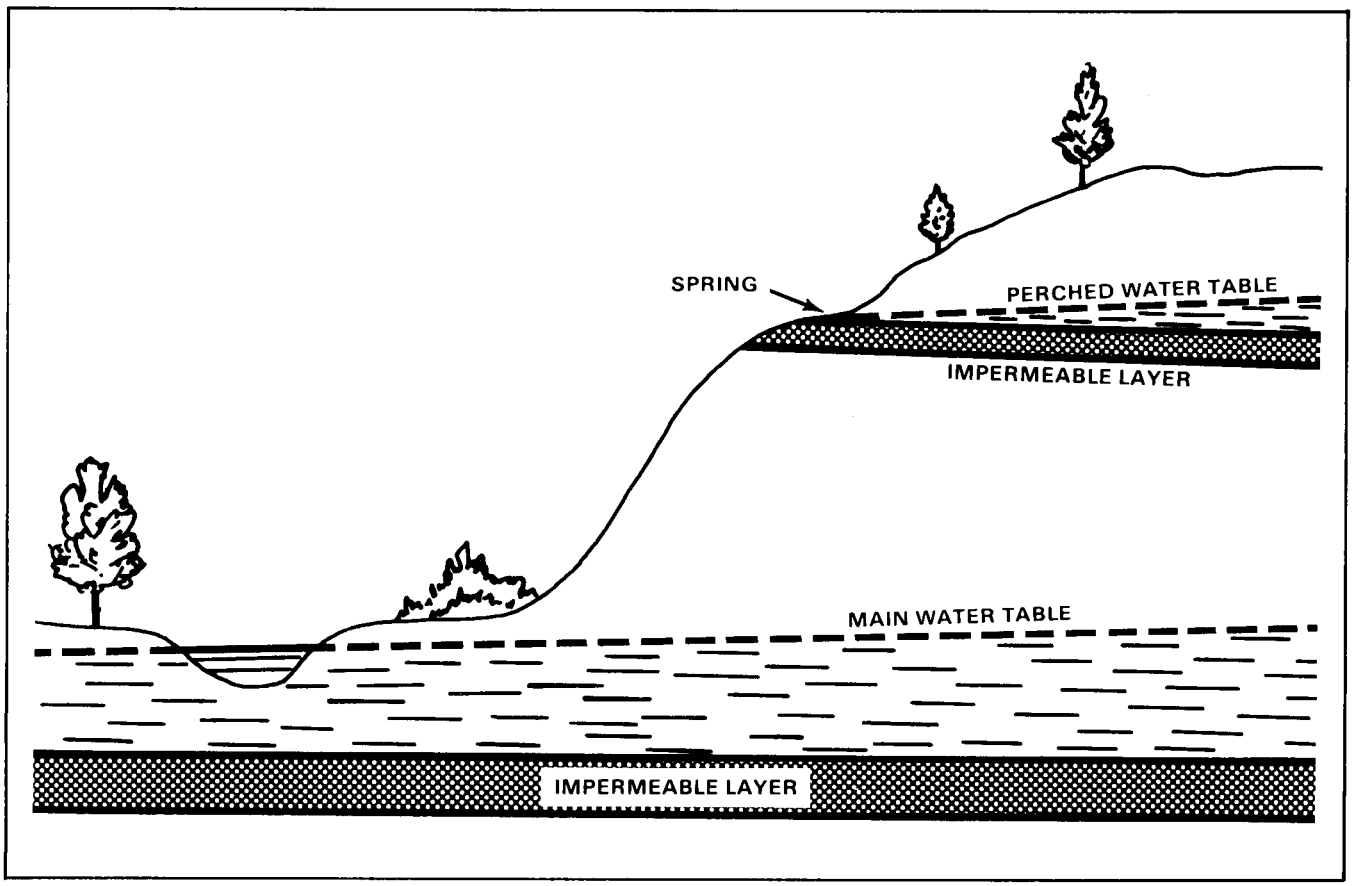

Figure 3-9. The water table

Types of Springs

Water which emerges at the surface naturally with a distinct current is called a spring. When a distinct current is not present, the flow is called a seep. Most springs and seeps represent water from rain or snow on some nearby higher ground which moves underground to where it comes up out of the ground. Its underground course depends on the type of soil it moves through. In some springs, the water bubbles up with a measurable force, indicating that it is under pressure. These are called artesian springs and will be discussed later. Any spring having a temperature higher than the yearly average temperature for a given region is termed a thermal spring. This indicates a source of heat other than that of the surface climate, of which magmatic heat is an example. Based upon the pressure of the emergent water, any spring or seep which is not artesian maybe classified as the gravity type. Gravity springs and seeps are those in which subsurface water flows by gravity from a high point of intake to a lower point of issue. The two most important types are—

- Water table springs and seeps, which occur where the water table comes near or intersects the surface of the ground.
- Contact springs and seeps, which occur along an exposed contact point, like along a hillside.

Water table springs and seeps are normally found around the margin of depressions, along the slope of valleys, and at the foot of alluvial fans. Contact springs appear along slopes but may be found at almost any elevation, depending on the position of the rock formations.

Spring Development

Develop a spring by enlarging the outlet of the spring and by building a dam and guiding the water to storage. To reduce possible pollution, clear a spring of all debris, undergrowth, top soil, loose rocks, and sand. Improve springs by building collecting boxes or digging ditches and tunnels. Collecting boxes or basins can be of wood, tile, or concrete. They collect water which flows from rocks under the force of gravity. The box should be large enough to hold most of the flow. Place it below the ground level so that only the top is slightly above the surface. Tightly cover the box to prevent contamination and decrease evaporation. Design the inlet to keep out surface drainage and prevent pollution. Fence the area and provide proper drainage. A screen on the overflow pipe keeps out insects and small animals. Another screen on the intake pipe keeps large suspended particles from being taken in by the raw water pump. To get water from a seep or contact spring, dig deep, narrow ditches leading from the spring to the point of collection. Another method is to build pipeline tunnels from the spring to the collection point. Large-diameter pipe is more suitable for this purpose. Trap water from the tunnels or pipes by a dam at the point of collection.

Artesian Water

When water is confined in a rock layer under pressure, an artesian condition is said to exist. If a well is drilled into an aquifer where there is such a condition, it is called an artesian well. Such a well, if it has enough pressure to bring the water above the ground surface, is called a flowing artesian well; if the water rises only to an intermediate level, it is a nonflowing artesian well. Whenever a natural outlet occurs in an artesian aquifer, an artesian spring is formed (Figure 3-10, page 3-8).

Man-Made Wells

Wells are classified into five types, according to their method of construction. The five types of wells are discussed below.

- Dug. A dug well is one in which the excavation is made by the use of picks, shovels, spades, or digging equipment, such as sand buckets or clamshell buckets.
- Bored. A bored well is one in which the excavation is made by the use of hand or power augers.
- Driven. A driven well is constructed by driving a pointed screen, referred to as a drive point, into the ground. Casings or lengths of pipe are attached to the drive point as it is being driven into the ground.
- Jetted. A jetted well is one in which the excavation is made by use of a high velocity jet of water. However, in some regions of the Arctic, steam is used for jetting instead of water.
- Drilled. A drilled well is one in which the excavation is made by either percussion or rotary drills. The excavated material is brought to the surface by means of a boiler, sand pump, suction bucket, hollow drill tool, or hydraulic pressure.

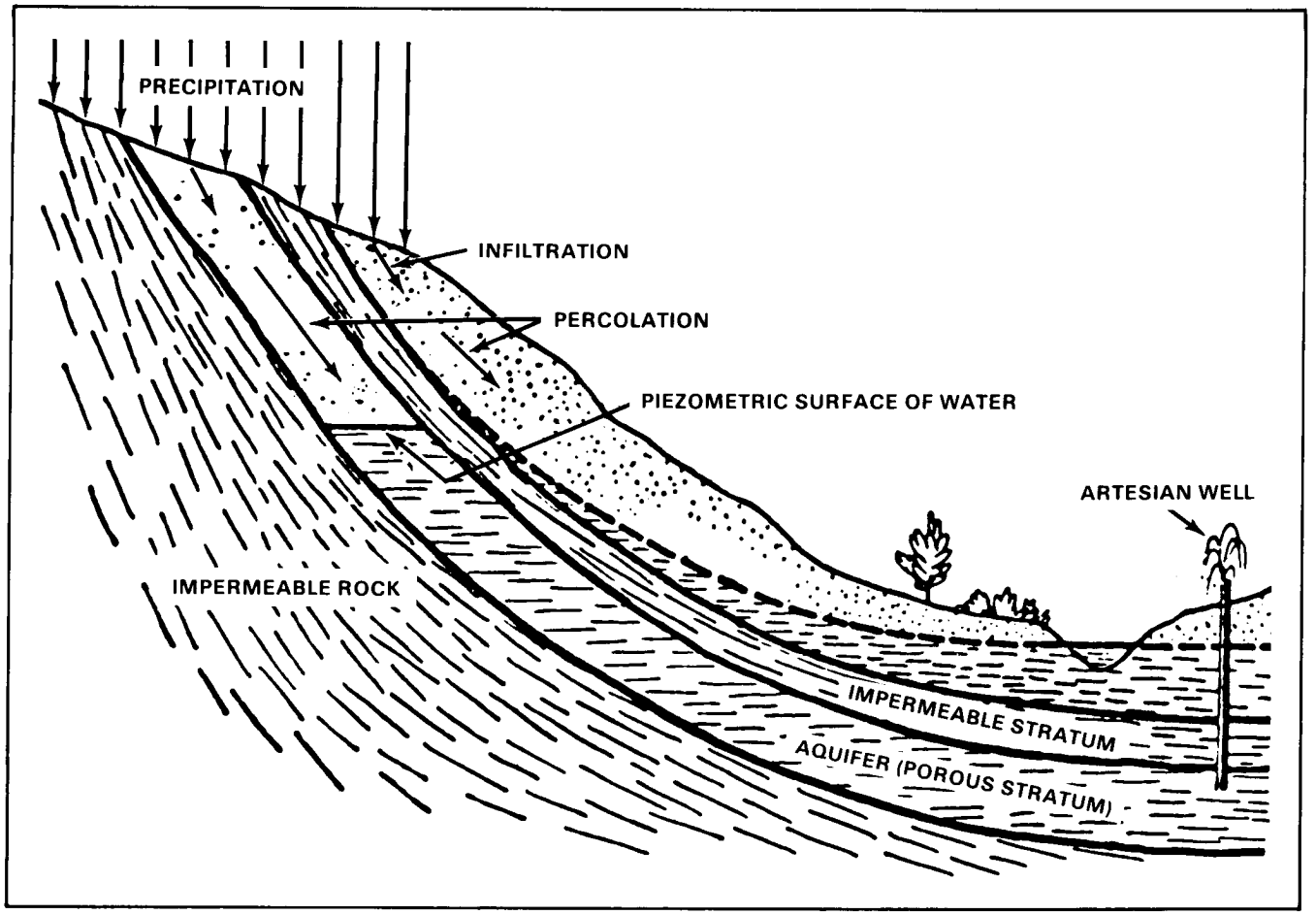

Figure 3-10. Artesian well

Hydraulics of Wells

Before a well is pumped, the water level is the same as the level of the surrounding water table. Measure the depth from the ground surface to the water level. This distance is called the *static level* of the well. Thus if the water in a well is 25 feet below ground, the static water level is 25 feet. Elevation of the static water level above mean sea level can also describe its position.

Pumping level. When a well is pumped, the static water level drops. After several hours of pumping at a constant rate, it stabilizes itself in a lower position. This is called the *pumping level* or dynamic water level for this rate of pumping.

Drawdown. The distance that the water is lowered by pumping is called *drawdown.* It is the difference between the static level and the pumping level. The drawdown in the well, resulting from the pumping, lowers the water pressure in the well; but the surrounding water-bearing soil retains its original pressure. In response to this difference in pressure, water flows out of the soil into the well.

Intrusion. Along coastal areas and on islands, there is always the danger of saltwater intrusion into ground water sources. By analysis, an accurate determination of the degree of salinity can be made. When you discover saltwater intrusion in the ground water supply, take steps to determine the cause (Figure 3-11, page 3-9). When small amounts of fresh water exist on islands and peninsulas, conservation is usually necessary to prevent saltwater intrusion. The amount of fresh water that can be pumped without intrusion of saltwater depends on local conditions, type of well, rate of pumping, and the rate of recharge of the sand by fresh water. In areas of high rainfall, the recharge rate of the sand is usually rapid; but if

the rainfall is seasonal, the wells may become dry if you do not ration water during the dry period. A rise in the level of the saltwater occurs if the head (amount) of fresh water is reduced for any reason such as excessive pumping or a decrease in rainfall. The drawdown in the fresh water level around the well causes a rise in the underlying saltwater. Restrict pumping of any one well according to drawdown, for saltwater will enter the well if drawdown is maintained greatly below sea level for extended periods. The pumping rate should not exceed the rate of recharge.

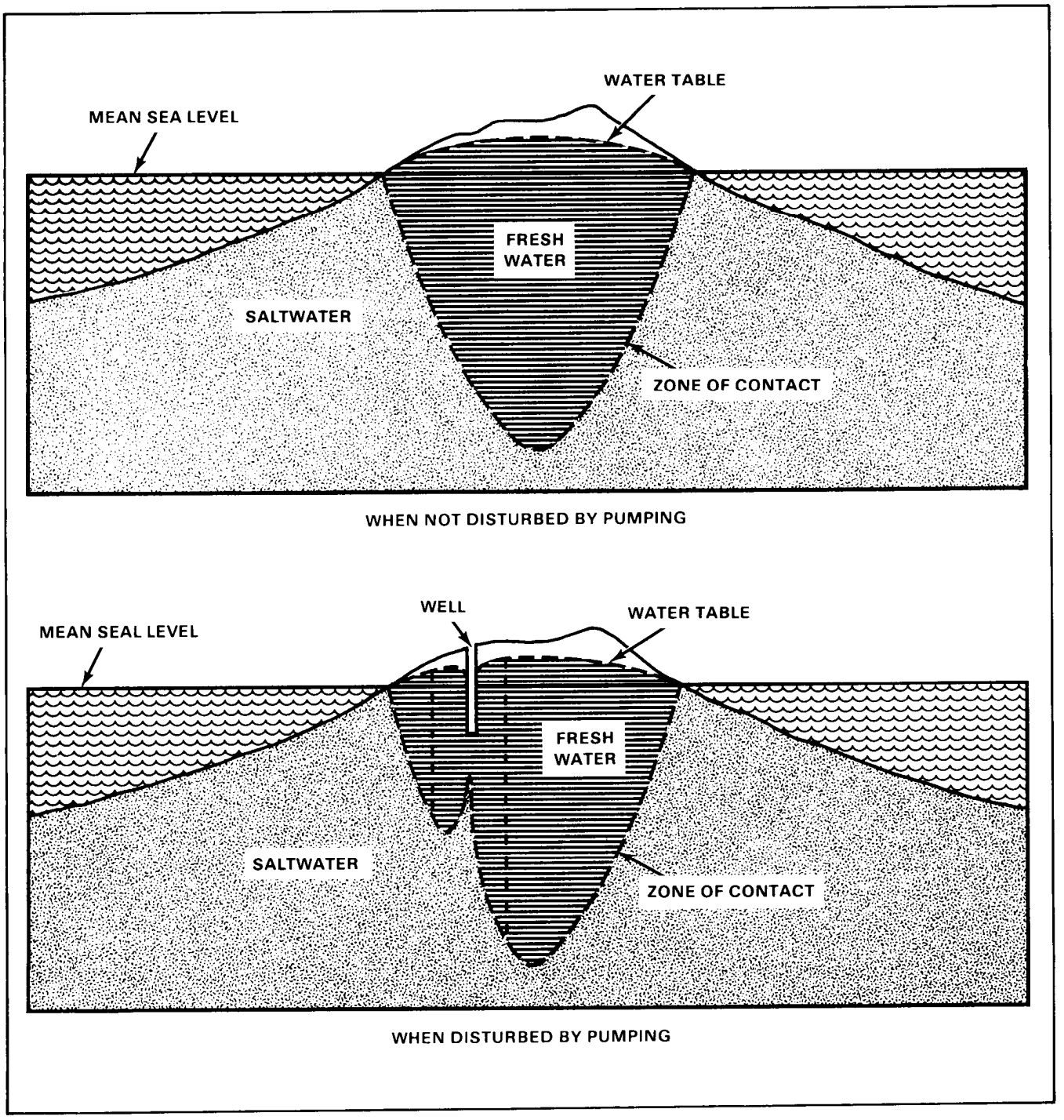

Figure 3-11. Saltwater intrusion

Well Yield and Drawdown

Pumping tests are made on wells to determine their capacity and other hydraulic characteristics and to secure information so that permanent pumping equipment can be skillfully selected and used. Preliminary tests of wells drilled as test holes are sometimes made to compare the yielding ability of different water-bearing formations or different locations in the same formation. Use this information as a basis for selecting the best site for a supply well and the aquifer in which it should be completed. Engineer well drilling units conduct these tests. However, if engineer units do not test the completed well, quartermaster water elements operating the well head must conduct the tests.

Measurements. The measurements that should be made in testing wells include the volume of water pumped per minute or per hour, the depth to the static water level before pumping is started, the depth to the pumping level at one or more constant rates of pumpage, the recovery of the water level after pumping is stopped, and the length of time the well is pumped at each rate during the testing procedure.

Specific capacity. The specific capacity of a well is its yield per foot of drawdown, usually expressed as GPM per foot of drawdown. The specific capacity is not constant for all values of drawdown but is nearly so for wells tapping very thick aquifers and wells operating under artesian conditions. Normally, the specific capacity of a well decreases with increased drawdown. The specific capacity indicates the relative yield of a well.

Pumping Procedures

The pump and power unit used for testing a well should be capable of continuous operation at a constant rate of pumpage for several hours. The equipment must be in good condition for an accurate test, since it is undesirable to have a forced shutdown in the middle of the test. If possible, the test pump should be large enough to test the well beyond the capacity at which it will eventually be pumped, but this may not be practicable under field military operations. For a fairly comprehensive test of a well, first operate the pump at a rate that will lower the water in the well about one-third of the maximum drawdown possible, or about one-third of the capacity of the pump. Continue pumping at this rate until the pumping level remains constant. This will require from one to four hours in most cases. After taking the necessary measurements, change the rate of pumpage to produce two-thirds of the capacity of the pump. Repeat the measurements when the pumping level becomes stable. Increase the rate of pumpage to produce the maximum drawdown, or increase it to the capacity of the pump and make measurements a third time when the pumping level becomes stable again.

Calculations

The drawdown observed during a well test is the difference in feet between the pumping level and the static water level before pumping was started. The specific capacity of the well is the yield or discharge in GPM divided by the drawdown in feet.

DEVELOPMENT OF SEAWATER SOURCES

Factors to be considered in developing seawater sources are surf action, saltwater corrosion, suspended sand and silt in the water, living organisms, surface oil along beaches, and the rise and fall of the water level with the tide. In Arctic regions, another factor is the potential for damage to raw water supply lines from ice floes washing onto the beach. In all regions, locate RO equipment on sheltered bays, harbors, lagoons, or inlets. You can supply raw water by intakes constructed the same as surface intakes for fresh water. On open beaches and small islands, the following intakes can be constructed.

Saltwater Wells

Beach wells are preferred to offshore intakes. Wells can be dug to tap brackish or salt ground water. This eliminates the problems caused by tides, surf, and shallow water close to shore. Another advantage of such wells is that they can be constructed in back of the shoreline under natural overhead concealment. Driven and jetted well points may also be effective at sandy beach locations. A disadvantage is the possibility of high hydrogen sulfate in the raw water, causing fouling problems with RO membranes and taste and odor problems in drinking water.

Offshore Intakes

Offshore intakes are sometimes required due to lack of time, personnel, or equipment required to develop beach wells. Also, coral formations sometimes prevent construction of wells. You can use intakes of either the rigid pipe or float type. If possible, locate either type in deep water beyond the surf action, and place intakes in a vertical position. They also must be off the bottom but beneath the water surface at low tide. In this way, the intakes will keep out foreign matter which may cause wear on purification equipment. Place intake of rigid pipes on supports that are anchored securely in position by pilings. Floats securely anchored can support intake screens the same as they do in surface waters.

Section II

DEVELOPMENT OF WATER POINTS

PURPOSES AND OBJECTIVES

There are a number of purposes and objectives in developing a water point. These are explained below.

Purposes

A water source developed for military use is called a water point. The development of a water point is the gradual improvement of the water point to increase the quality and quantity of the water and the efficiency of its water treatment and distribution facilities. Orderly development serves to eliminate those bottlenecks and other shortcomings which may occur following the establishment of a water point.

Objectives

Direct all work done during water point development toward the following six objectives. Unless the work furthers one or more of these objectives, it is unnecessary and should not be done:

- Increase the quantity of potable water available.
- Improve the quality of water produced.
- Lessen storage and distribution problems.
- Decrease site and equipment maintenance needs.
- Improve security of operations.
- Improve living conditions of water point personnel.

PLANS FOR WATER POINT DEVELOPMENT

Proper planning is essential to the orderly development of a water point and should be foremost in the minds of reconnaissance and supervisory personnel. When possible, they should select the site requiring the least improvement. They should prepare a schedule of recommended improvements and follow it. They should give priority to removing obstacles that limit operations. Supervisory personnel at each site need training in water point development.

Order

The relative importance of the problems encountered at each site and the tactical situation determine the order for improvements at water points. For example, in jungle terrain where water is readily available and cover and concealment are good but routes of communication are poor and guerrillas are present, consider distribution facilities and security first. Give priority to those conditions which are necessary to establish the water point and continue water supply operations.

Extent

The extent to which a water point is developed depends primarily on the time, labor, troops, and materials available to do the work. At forward-deployed sites, develop enough to supply potable water to using units. However, in the corps rear area and the COMMZ, the extent of development will vary with the size of the water point, the problems to be overcome, and the permanence of the installation.

SITE IMPROVEMENT CONSIDERATIONS

You must consider a number of factors when improving a site. These are explained in the following paragraphs.

Drainage

The importance of providing for drainage cannot be overemphasized. Wastewater from treatment units, leakage from tanks, and spillage from distribution facilities keep the area of operation wet. Poor drainage may also cause the area to be so muddy that it becomes unusable. If vehicles cannot get to the point of distribution, the water point no longer serves its purpose. Also, during the winter this water may freeze, causing a serious safety hazard for personnel and equipment. Avoid such conditions by having good drainage at each site. Always direct drainage downstream from the purification, storage, and distribution operations.

Storage Facilities

Storage facilities should be large enough to meet daily peak demands and maintain command-directed DOS. This will eliminate long waits at the water point by consumers and ensure sufficient quantities are available for mission requirements. Water treatment personnel may install collapsible fabric bags to achieve required storage capability. This is in addition to the tanks issued with the purification equipment. Site considerations for these collapsible fabric bags include level (less than 3-degree slope in 100 yards) and clear terrain. Also, you may use existing host nation or occupied country facilities.

Road Networks

A satisfactory water point must be accessible to vehicles and personnel. A good road net with turnarounds, checkpoints, cover, and concealment at the water point and an adequate parking area are desirable features. The load capacity of roads should be sufficient to withstand the heaviest vehicles under all weather conditions. Locate the water point on improved roads whenever possible but avoid main supply routes.

Turnouts and turnarounds. When water points are located along roads, provide facilities for loading consumers' trucks without interfering with normal traffic. A turnout may be a widened section of the main road or a new one-way road past the water point (Figure 3-12, page 3-12). The type used depends on labor and equipment available. For large installations, a turnaround is more convenient and efficient since there is space for water to be distributed to more than one truck at a time (Figure 3-13, page 3-13). Drainage is very important, especially if new construction is required for the turnouts or turnarounds.

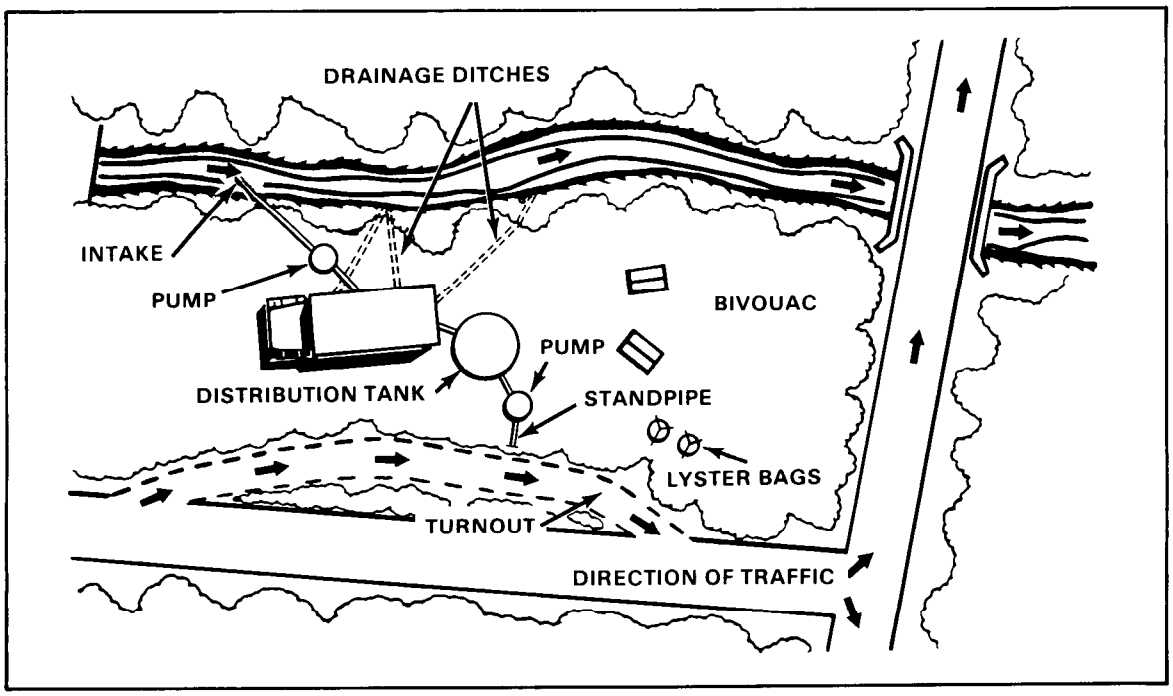

Figure 3-12. Turnout at a water point

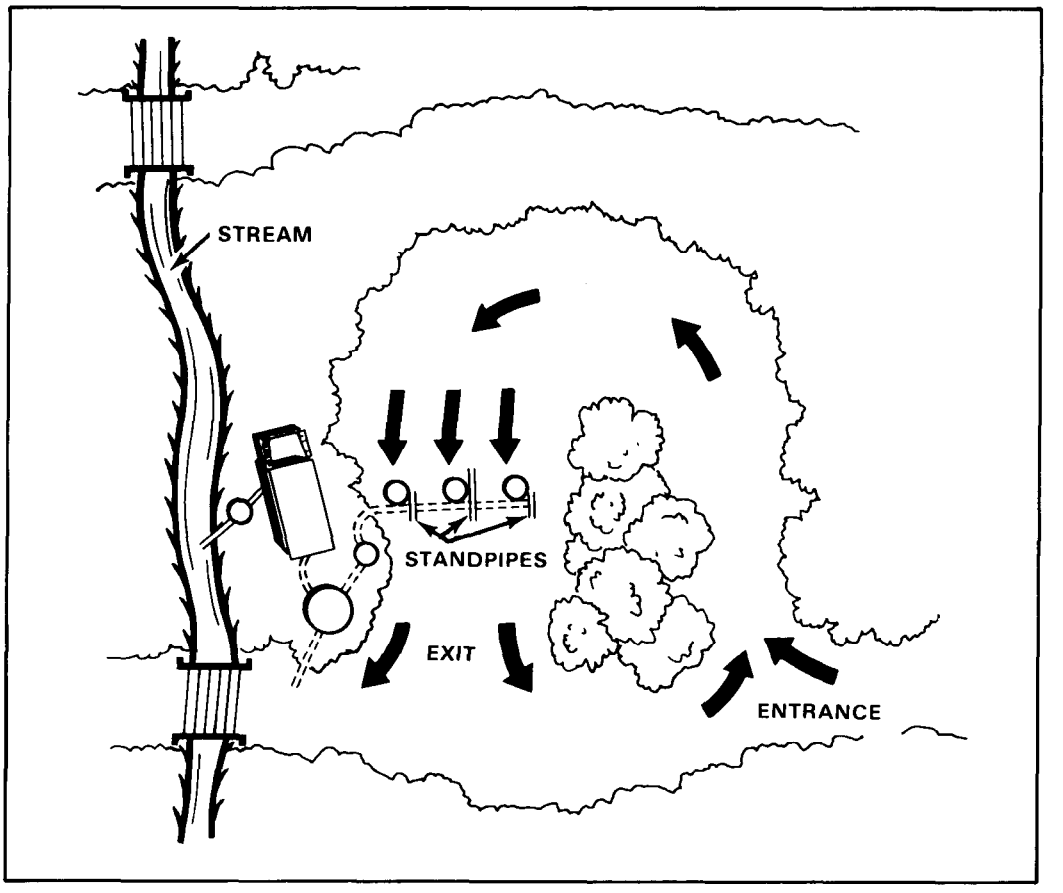

Figure 3-13. Turnaround at a water point

Checkpoints. Set up checkpoints at the entrance and the exit of the supply point. Give personnel coming into the area a safety briefing. Use the checkpoints not only to control the traffic but also to monitor logging the issue of water from the supply point.

Traffic signs. Water treatment personnel should mark the route to the water point with signs. The signs (Figure 3-14, page 3-14) should be clearly visible to vehicle drivers. Place them so there will be little cross-traffic interference. Also, post them at all critical points within two miles of the water point. Post them at side roads, crossroads, and forks in the road. Place luminous buttons on the signs to help direct vehicles during blackouts. The signs should be made in advance and stored with the water equipment for field use.

Camouflage

Camouflage misleads the enemy by misrepresenting the true identity of an installation, an activity, or an item of equipment. See FM 5-20 for the basic principles of camouflage. The water source may not be within the boundaries of a base or base cluster and, as a result, imposes a special problem of security. The best means of reducing the chances of attack is to deny the enemy any information concerning the location of the water point. This can be done by maximum use of overhead concealment and the use of camouflage nets to distort equipment outlines and shadows. Camouflage nets are particularly applicable for use with the mobile purification units where overhead concealment is lacking. Whenever possible, provide parking areas, turnouts and turnarounds, and all distribution facilities with overhead concealment.

Bivouac

In addition to the other steps involved in developing a water point, select a bivouac area for water point personnel and security forces. In selecting a site, consider security, facilities,

sanitation, and comfort of the troops. Although the situation may not permit selection of a site which fully meets all requirements, consider the soldiers' well-being and health. Conveniently locate water supply personnel with respect to the water point. Such a location will facilitate the arrangement of shifts and make personnel readily available in case of emergencies. Locate the bivouac area at least 100 feet away and downstream from the selected water source. See FM 21-10 for field sanitation and other desirable features for bivouac.

Security

Troop morale, welfare, and health depend on a reliable source of potable water. Therefore, commanders must take measures to provide security for water points. A lack of security could result in complete loss of a water point; or the enemy could contaminate storage and distribution facilities, thus disabling or killing those who drink the water. Communication channels to water supply personnel should be kept open. Keep personnel informed of the tactical situation. Provide shelters to protect water supply point personnel from the effects of NBC weapons.

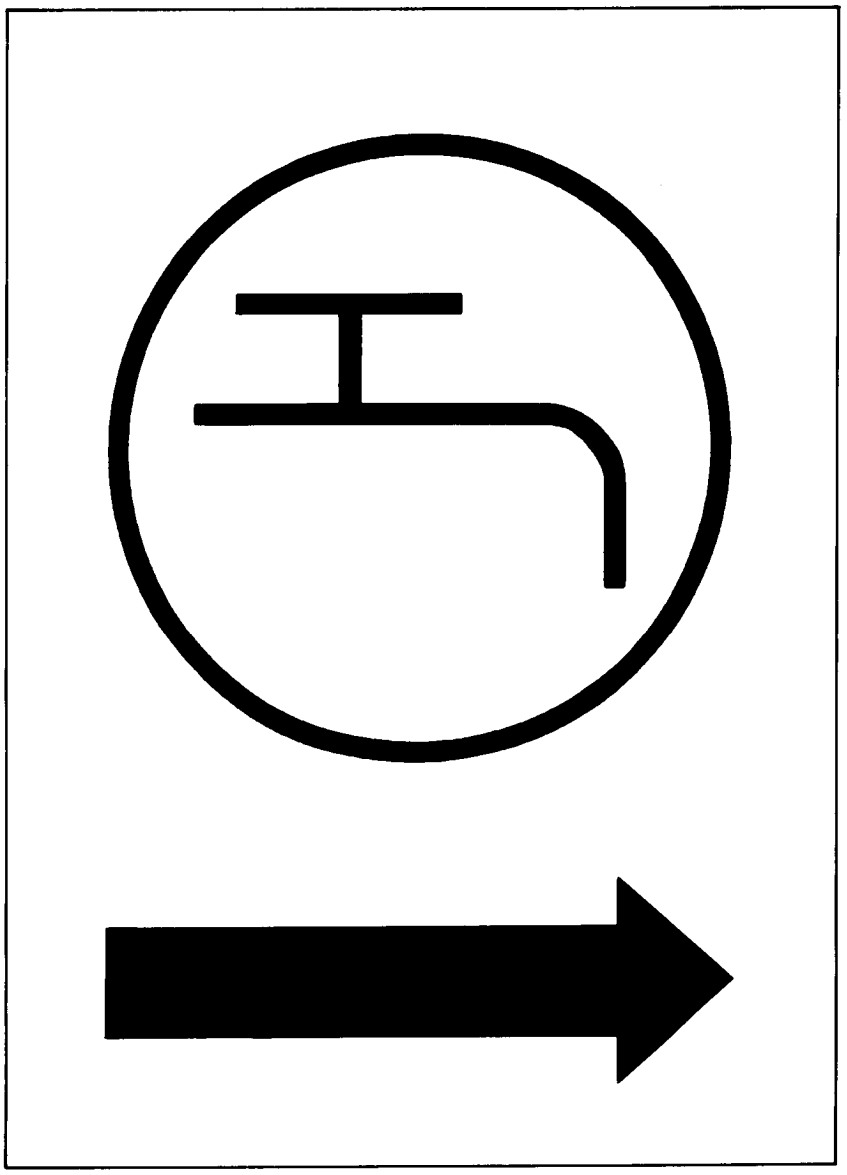

Figure 3-14. Water point signs

CHAPTER 4

Purification Operations

Section I

SITE AND SAFETY CONSIDERATIONS

PURIFICATION SITE

Select a water purification site from several proposed sites surveyed by the water reconnaissance teams. Once a site is chosen, position water purification units on level ground. Position the units so that no additional equipment is necessary to operate the raw water pumps, the distribution pumps, and the backwash pump. Use natural cover, when possible, for overhead concealment. Disconnect vehicles used to transport purification units from the purifiers during normal operations. The position of the storage tank area should be level but still have good drainage for runoff. Direct drainage away from the generator's operations. Use ground covers (tank bottoms) for all water tanks.

SAFETY PRECAUTIONS

Properly ground the purification unit. If the generator is separated from the purifier, ground it also. Fire extinguishers must be on site and a fire point established. All support legs to the purifier must be down and in the locked position. Operators will wear hearing protection when equipment is in operation. Block the wheels of the purification unit. Post no smoking signs near fuel points and operational areas. Do not store chemicals under direct sunlight. Use aprons, gloves, and goggles when handling chemicals.

Section II

600-GPH ROWPU

OPERATIONS

In order to properly operate the 600-GPH ROWPU, a soldier must understand the preparation, setup, initial start-up, PMCS, and shutdown. These procedures are listed below.

Preparation of Purifier

After selecting the best site, maneuver the unit into position. Remove the unit from the prime mover, and prepare it for self-support, grounding the generator and the purifier. Secure the safety step in place, and roll up the side canvas. Remove all stowed equipment.

Setup of Purifier

Connect the raw water and backwash systems. Connect the wastewater and vent vessel outlets.

Connect all hoses to the chemical feed pump. Mix chemicals in their proper solutions, and calibrate the chemical feed pump. Connect the power cords from the raw water and backwash and distribution pumps to the purifier. Check the position on all drain and vent valves. Finally, check the position of switches on the control box.

Initial Start-Up

Follow the procedures outlined in TM 5-6115-465-12 to start the power generator. After ensuring the emergency stop button is pulled out, prime and start the raw water system. Once water is flowing into the purifier, start the chemical feed pump and set the polymer pump to run. Close the multimedia filter vent valve after a steady flow of water comes out. Next, start the booster pump. Close the cartridge filter vent valve after you observe a steady flow of water. Press the RO pump's reset button, then start the RO pump. Close the pulse dampener vent valve after you observe a steady flow of water. After 10 minutes, observe the RO vessel vent valve line for adequate flow and clarity of water. Next, examine the filtered water from cartridge filter drain valve one for clarity. Now set the sodium hex pump to run. Then slowly close the RO vessel vent valve. Slowly adjust the product water flow valve (being sure to carefully watch the brine flow gauge, the product water flow gauge, and the RO pressure gauge) to obtain the proper flow based on either a fresh or a saltwater source. Close the product water vent valve, and set the chlorine pump to run.

Operational Checks

Maintain proper flow rates into the purification unit at all times (27 to 33 GPM). Record the initial multimedia filter gauge reading. Maintain a psid reading of not more than 10 psid across the multimedia filter. A reading above 10 psid indicates the need to backwash the multimedia filter. Maintain the cartridge filter gauge reading from 1 to 20 psid while in operation. A reading higher than 20 psid indicates the need to replace the cartridge filters. The brine flow gauge reading will be from 16 to 24 GPM for normal operations. Product water flow readings for fresh and brackish water should not exceed 16 GPM while saltwater flows should read from 6 to 12 GPM. The RO pressure gauge reading should not exceed 500 psig for fresh water and 960 psig for saltwater. The RO vessel gauge should show a reading of 50 to 100 psid during normal operation. A reading higher than 100 psid indicates the need to clean the RO elements. Check the product water TDS (it must be below 1,000 ppm). Monitor the brine water flow into the backwash tank. Once the backwash tank is filled, the brine will be discharged back to the source. Monitor the low- and high-pressure lamps on the control box. If either light comes on, it may be necessary to press the emergency stop button. Continue operations, monitoring the chlorine residual in the product water to ensure 5 ppm is maintained. Stop operations for routine maintenance after 20 hours of operations, when the multimedia filter gauge rises above 10 psid, when the cartridge filter psid rises above 20, when the RO vessel gauge reads above 100 psid, for mechanical breakdown, or for normal shutdown.

Shutdown

To shut down the purifier for any of the above reasons, follow the procedures described here and in the order shown in Figure 4-1 (page 4-3). First, set the chemical feed pumps to prime. Then open the regulate product flow valve and wait five minutes. Then open the product water and vessel vent valves. Open the cartridge filter vent valve, pulse dampener vent valve, and multimedia filter vent valve (all located on the control panel). Place all toggle switches on the control panel in the stop position (the RO pump, booster pump, chemical feed pump, and raw water pumps 1 and 2). Finally, follow the prescribed procedure for shutting down the generator.

Backwash

When shutting down the purifier to backwash the multimedia filter, follow these procedures. Place the RO element cleaning switch, located on the back of the control panel, to the off position. Press the reset button on the backwash timer. Check to ensure the backwash tank is full and the backwash strainer is clear. Open the backwash tank valve, and turn the backwash valve on the control panel to the backwash position. Then start the backwash pump with the switch located on the control panel. Backwash operations last approximately 13 minutes. Water flow rates vary during backwash from O to 70 GPM during low cycle to O to 120 GPM during high cycle. Check TM 5-4610-215-10 for the recommended settings on the backwash timer.

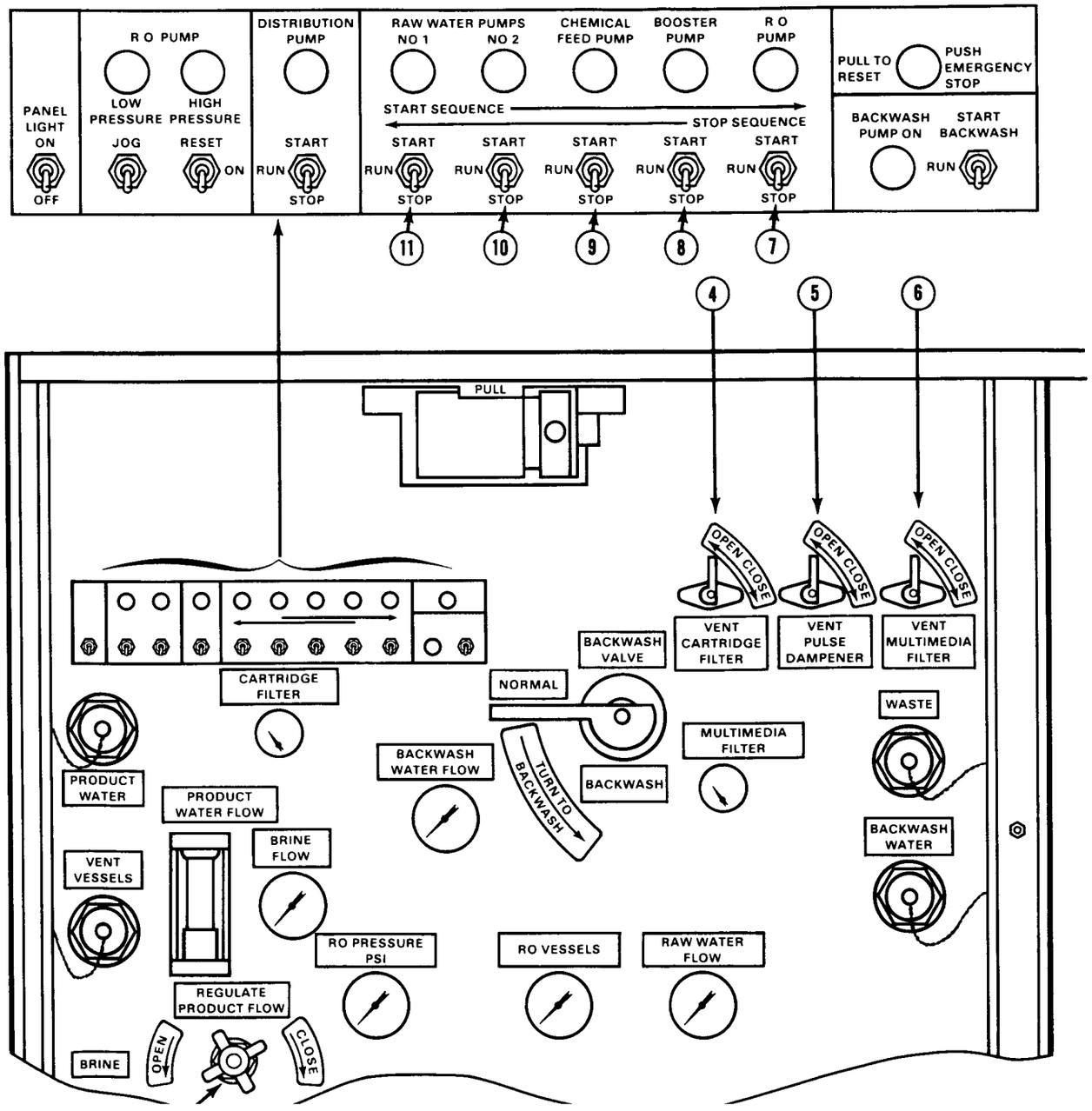

ORDER	VALVE OR SWITCH	POSITION
1	REGULATE PRODUCT FLOW valve	OPEN
2	VENT PRODUCT WATER valve (not shown)	OPEN
	CAUTION **After opening the regulate product flow valve fully, wait five minutes before opening vent vessels valve.**	
3	VENT VESSELS valve (not shown)	OPEN
4	VENT CARTRIDGE FILTER valve	OPEN
5	VENT PULSE DAMPENER valve	OPEN
6	VENT MULTIMEDIA FILTER valve	OPEN
7	R O PUMP switch	STOP
8	BOOSTER PUMP switch	STOP
9	CHEMICAL FEED PUMP switch	STOP
10	RAW WATER PUMPS NO 2 switch	STOP
11	RAW WATER PUMPS NO 1 switch	STOP

Figure 4-1. 600-GPH ROWPU control panel

RO ELEMENT CLEANING

When the pressure differential across the RO membranes exceeds 100 psid, you need to clean the RO element. The first step is to backwash the multimedia filter. Then adjust the level of water in the backwash tank to 7 inches from the bottom. Disconnect the discharge hose from the discharge side of the backwash pump, and connect the vessel vent outlet hose to the discharge side of the backwash pump. Add 1 pound of citric acid to the backwash tank and stir. Make sure the product water flow, backwash tank, and vessel vent valves are open. Remove the product water hose from the product water tank, and place it downstream. Place the brine hose in the backwash tank. Switch on the RO element cleaning switch. The brine flow gauge should read 16 GPM or more. After five minutes of cleaning, check the pH of the brine. Add 1 pound of citric acid every five minutes until the pH is 3.5. After 3.5 pH is achieved, continue cleaning the RO elements for 45 minutes. During this entire process, the water temperature must not exceed 120°F. After the cleaning process is complete, turn off the RO element cleaning switch. Disconnect the vessel vent outlet hose from the discharge side of the backwash pump. Connect the backwash discharge hose back to the discharge side of the backwash pump. Drain the backwash tank into a sump. Do not place the product water hose into the product water tank until you have rinsed the RO systems for at least 10 minutes. For normal start-up, perform the procedures given in the paragraphs on Setup of Purifier and Initial Start-Up at the beginning of Section II. Operate the unit for 10 minutes with the regulate product flow valve at the fully open position to rinse the RO elements, the product water line, and the brine water line. Adjust the product water flow valve to obtain proper flow for the type of raw water source (fresh, brackish, or salt), and run the unit for three minutes with the product water line still discharging to waste. Finally, place the product water hose back into the product water tank.

Section III

3,000-GPH ROWPU

3,000-GPH ROWPU OPERATIONS

In order to start the 3,000-GPH ROWPU, the soldier must understand the preparation and initial set-up of the ROWPU. These procedures are listed below.

Preparation and Initial Set-Up of Purifier

After selecting the best site, maneuver the unit into the predetermined position. Drive-in access for the equipment must beat least 12 feet wide. The ground must be smooth and clear. You need a work area at least 35 feet by 70 feet for equipment maneuvering and set-up. Make a cleared path at least 3 feet wide to the water source. The work area must not be more than 30 feet above the raw water pump, and the raw water pump can be no more than 15 feet above the surface of the water source. The parking of the ROWPU (mounted on the trailer) can be no more than 200 feet from the raw water pump. The grade of the parking surface must not exceed 2 degrees crosswise and 5 degrees lengthwise. The storage tanks must also fit on this leveled surface (Figure 4-2, page 4-5).

As you position the trailer, the raw water source must be to the right of the truck cab. Move the trailer into a position at the work site which will allow the front end to be slightly lower than the rear for water drainage. Position the trailer so that there is no more than a 2 percent side-to-side grade. Place wheel chocks under the wheels to prevent trailer movement. Place load boards under the landing gear. Lower the landing gear and unhook the trailer from the tractor. Using the bubble level mounted on the ROWPU, adjust the landing gear so that the front of the trailer is 1/2 bubble lower than the back of the trailer (Figure 4-3, page 4-6).

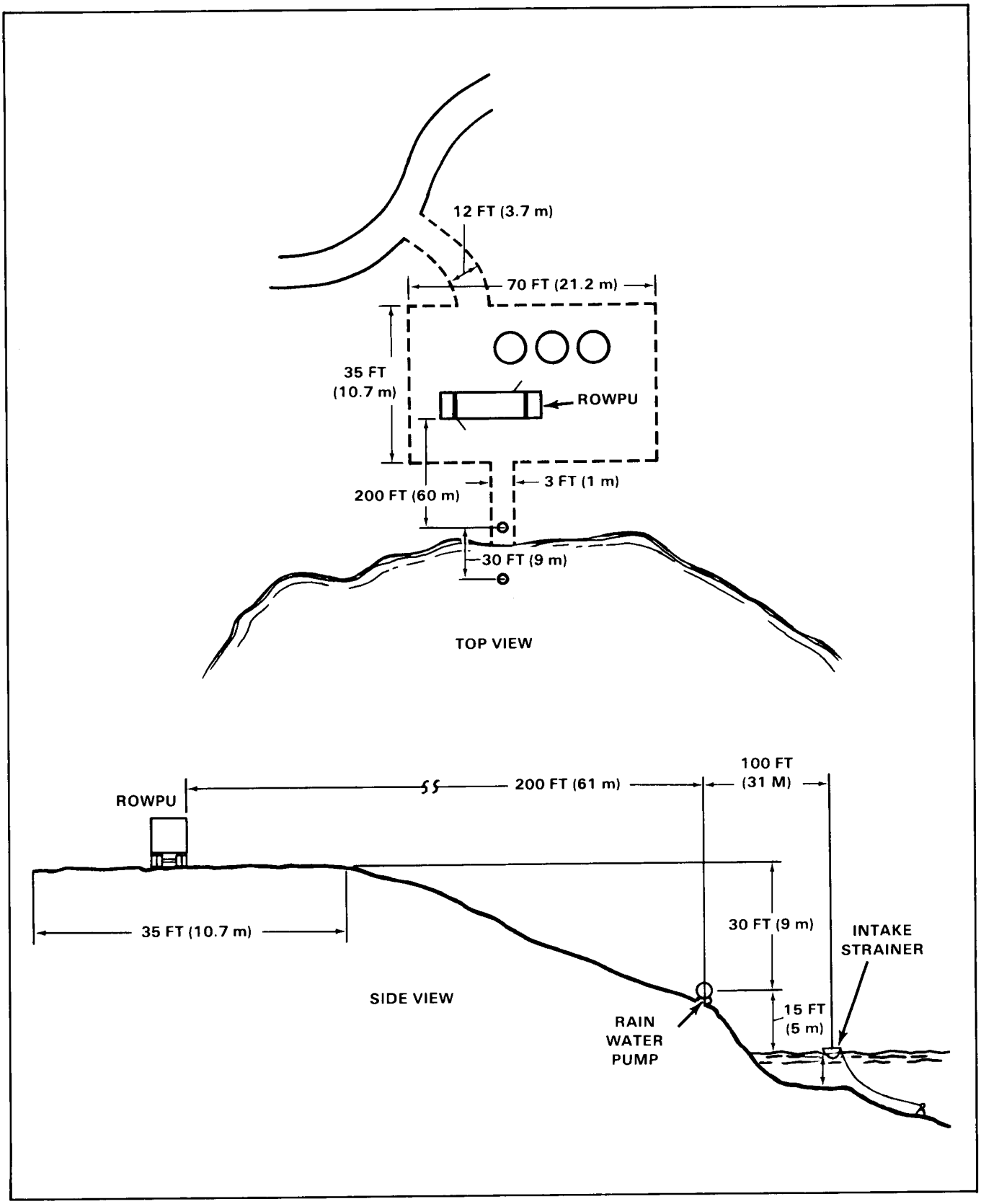

Figure 4-2. 3,000-GPH ROWPU site requirements

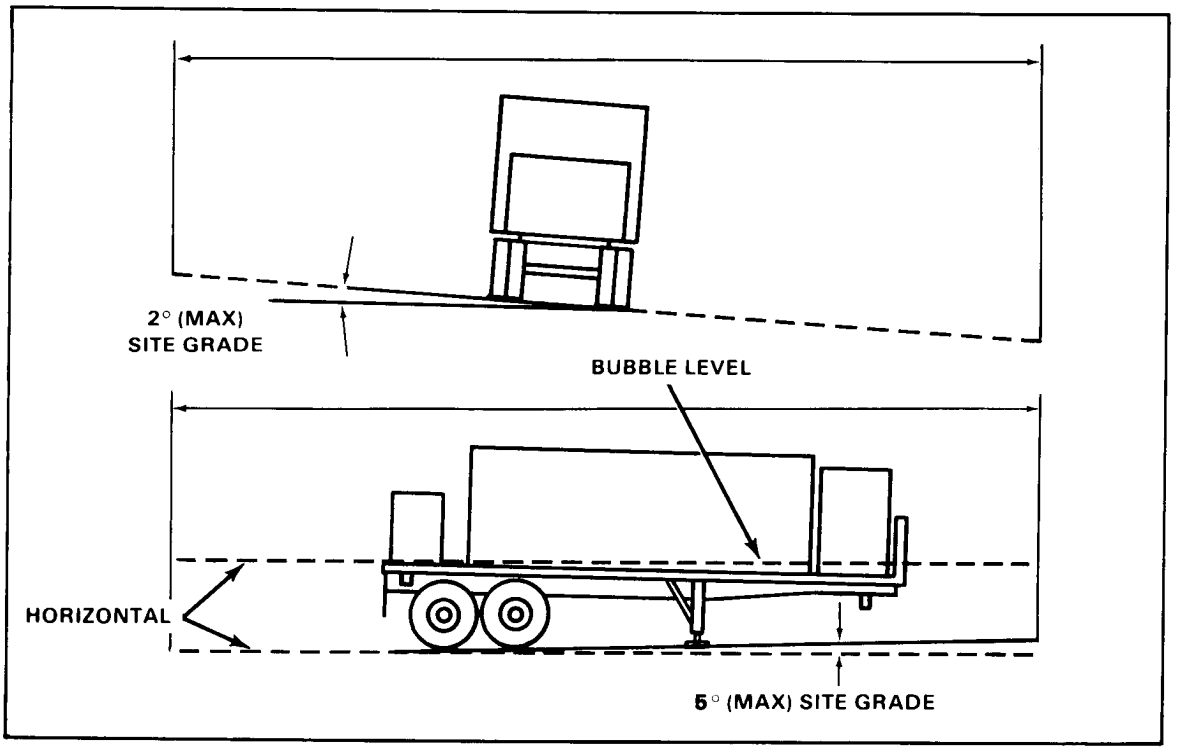

Figure 4-3. 3.000-GPH ROWPU level requirements

Unstrap and remove the two ROWPU access ladders, hand rails, and generator ladder from in front of the generator. Position the generator ladder and install one ROWPU access ladder at the door on the raw water side of the ROWPU. Ground the generator and the purifier. Remove all stowed equipment. Ensure the piping between the high-pressure pump skid and the ISO components do not have loose connections. Perform all before-operation PMCS. Follow the procedures in TM 5-4610-232-12 to establish electrical power.

As a preliminary to start-up, direct raw water through the media filter and out to waste through the forward flush valve. This helps to condition the filter bed and protects the RO elements from the high turbidity water always delivered in the first few minutes of filter start-up. The raw water pump can be no more than 30 feet from the water's edge. The water's depth must allow the intake strainer to be no less than 3 feet from the bottom of the water source. A water depth of 5 feet or more is preferred. Carry or use the shoulder straps to pull the raw water pump into place. Locate the pump within the limits shown in Figure 4-2 (page 4-5) and upstream of the cyclone separator if the water source is a river or has a prevailing flow. Make note of tidal or river flood conditions and keep the pump located beyond the reach of the water. Keep the following suggestions in mind:

- Place the intake strainer in the center of narrow rivers in the deepest water.
- Place the intake strainer at least 50 feet from the shore in wider rivers.
- Place the intake strainer as far out as possible at ocean beaches.
- Place the raw water pump less than 30 feet from the water's edge.
- Flat tidal beaches may require moving the pump according to tide conditions.
- Prime the raw water pump. With the raw water pump primed, the raw water discharge hose should be hard with pressure when the booster pump is started. This should provide the 100 GPM feed flow required for flushing. If 100 GPM cannot be obtained, either the valves are incorrectly set or the raw water pump is unable to provide 100 GPM. If this is the case, check TM 5-4610-232-12 and automatic valves for proper settings. Look at the raw water discharge hose. If it is partially collapsed or pulsing, the problem is in the raw water system. Check the hose for kinks and sharp bends. All curves should be smoothly laid out. Check suction hose connections and the intake strainer.

Operation of the 3,000-GPH ROWPU

In addition to start-up, the soldier must understand how to shut down the ROWPU in either short-term or long-term status. These procedures are listed below.

Start up purifier. Start-up procedures vary with the status of the ROWPU at its last shutdown. Start-up procedures occur after the ROWPU is secured or drained, after an emergency stop, after the ROWPU is shut down to a stand-by condition, after a media filter backwash, and after RO element cleaning. Refer to TM 5-4610-232-12 for more specific guidance.

Shut down purifier to stand-by. There are procedures to follow when placing the ROWPU into stand-by status. These procedures are listed below.

The ROWPU is shut down to stand-by by fully opening the System Pressure Control Valve and pushing the High Pressure Pump Stop button.

After the feed flow drops below 60 GPM, push the Booster Pump Stop button.

Next push the Chemical Pump Stop and Raw Water Pump Stop buttons. The air compressor may be left on for short shutdowns. For shutdowns longer than one hour, the compressor should be turned off, the main circuit breaker turned off, and the generator shut down (diesel generators should not be run with small loads for long periods). If the ROWPU is kept in stand-by more than three hours, the RO elements may lose performance and require cleaning. Use the secured shutdown procedure when a longer shutdown is anticipated and the media filter has not been backwashes.

Start up after stand-by shutdown begins with media filter forward flush to waste. This flushes out the usual surge of dirty water when restarting the filter. A three-minute flush is required. This is important since you do not want to put dirt into the RO elements.

Shutdown to temporary secured status. Use this shutdown procedure when the ROWPU will be shut down for three hours to three days. You will need 525 gallons of potable water in this procedure. Be sure the water is available. Before shutdown, be sure that you have a 5-gallon can filled with product water. Use it in the polyelectrolyte tank during the start-up following shutdown. To temporarily secure the ROWPU, backwash the media filter and flush the system, following the procedures in TM 5-4610-232-12. A sanitizing flush will leave the RO vessels full of sodium bisulfite sanitizing solution. Drain this solution only if the ROWPU will be subject to freezing. To perform a sanitizing flush—

- Refill the clean/flush tank with 50 gallons of product water. Add two 2-pound bags of sodium bisulfite to the tank. Fill the tank to the 75-gallon level and repeat the system flush procedures.
- Close the system pressure control valve and distribution valve.
- Clean and flush the hypochlorite tank and pump for shutdown periods exceeding 24 hours. The polyelectrolyte and sequestrant systems do not need to be flushed. However, drain these tanks prior to moving the ROWPU or if the shutdown will exceed 24 hours. To complete the shutdown, open all drain valves except those on the RO vessels. Open the 'media filter and cartridge filter vent valves. Turn the main circuit breaker to off and secure the generator. The generator should not be used to provide power to the utility and lighting circuits during the secured shutdown if the shutdown is for a prolonged period.

Shutdown to long-term secured status. Use this procedure when the ROWPU will be shut down for more than three days. You must have 1,000 gallons of potable water available. Before completing operations, fill a 5-gallon can with product water to use in the polyelectrolyte tank during the next start-up. The procedure for shutdown to long-term is the same as temporary-secured with the addition of removing the raw water suction hose at the pump and opening the drain valve on the pump. Disconnect the raw water discharge and waste hoses. Coil them and place them in a protected place. Turn off the air compressor, and open the air manifold bleed valves. Turn off the main circuit breaker and secure the generator. Drain the distribution systems. Pack the equipment for movement or storage. This completes shutdown of the ROWPU.

Alarm shutdowns. The alert horn will sound and the ROWPU will automatically shutdown for the reasons listed below. If this should happen, push the Alarm Silence button and refer to the troubleshooting chart in TM 5-4610-232-12 to locate and reined y the cause for shutdown.

If the feedwater pressure to the high-pressure pump is low, the Feed Pressure Low red light will go on.

If the high-pressure pump has excessive discharge pressure, the High Pressure Pump Pressure High red light will go on.

If the product water pressure is excessive, the Product Pressure High red light will go on.

If the clean/flush tank level is too low, the Clean/Flush low-level light will go on.

Emergency stop. Push the Emergency Stop button only when equipment failure or another problem demands immediate shutdown. Do not use the Emergency Stop button for routine shutdown. Pushing the Emergency Stop button immediately stops all motors within the ROWPU. To restart, pull out the Emergency Stop button, push the System Reset button, and push the Initiate button.

Operational Maintenance

To properly maintain the 3,000-GPH ROWPU, the soldier must understand backwash, RO element cleaning, systems flush, detergent clean, and citric acid clean. These procedures are listed below.

Backwash media filter. During a typical filter run (time between backwashes), the turbidity will initially decrease with time. After some time it will increase, indicating that the filter is so loaded with dirt that it can no longer remove dirt efficiently and requires backwashing. Record the media filter outlet turbidity at one-hour intervals. Note the time and polymer pump settings on the Media Filter Log. This log provides information essential to the best operation of the ROWPU. If the turbidity recorded is more than 0.5 NTU higher than the lowest recorded turbidity, the filter is no longer efficiently removing dirt and requires backwashing. If allowed by mission demands, backwash the media filter as soon as you find the polyelectrolyte optimum setting. After this first backwash, set the pump stroke back 5 percent from the determined optimum. Check the turbidity after the same length of filter run as when you first determined the optimum. If equal or less, keep this new setting. If higher, increase it 5 percent to the original optimum. Backwash media filter at least once each day, every six hours on rivers and lakes with high organics where turbidity is over 15 NTU and the temperature is over 70° F, whenever media filter outlet turbidity increases by more than 0.5 NTU over the lowest reading since the last backwash, whenever the Media Filter Plugged light and warning horn go on, or whenever the pressure drop reading is over 20 psid. Follow the procedures for backwashing the media filter outlined in TM 5-4610-232-12.

RO element cleaning. The RO elements may become fouled as described in Chapter 1. If the polymer has been carefully optimized and scale inhibitor, such as sodium hex, has been used, this fouling will be slow in most water sources. Rapid fouling may result in some water sources even when the polymer has been correctly optimized. Routine detergent cleaning at 100-hour intervals as noted by the high-pressure pump hourmeter will help reduce this fouling. Fouling may continue to build and can be noted by changes in operating conditions. You will then need an extended RO element cleaning.

Determine if extended RO element cleaning is needed. Use one or all of the following procedures to determine this.

- Check the log book and note the operating pressure required to provide mission normal water flow. If it has increased by more than 100 psig since the first start-up at the present site, extended cleaning is needed.
- Determine the total RO element pressure drop by reading the RO pressure on the Reverse Osmosis System Pressure Gauge with the Reverse Osmosis Pressure Select valve in the In position. Next switch the Reverse Osmosis Pressure Select valve to the Out position and read the Out pressure. Subtract the Out pressure from the In pressure to obtain the RO element pressure drop. Note the product flow rate on the Product Flowmeter. Refer to TM 5-4610-232-12 to determine the limiting pressure drop listed for the nearest product flow to the actual flow. If the actual pressure drop exceeds the limiting pressure drop, extended cleaning is needed.
- Using the portable TDS meter, measure the TDS at the four RO vessel sample valves and at the combined product sample valves. Compare the TDS readings for the top two vessels. If they vary by more than 10 percent from each other, internal O-ring leakage is indicated and you should contact organization maintenance. Repeat the same procedure for the bottom two vessels. Compare the

combined sample TDS with the appropriate value calculated from Table 4-1 (page 4-9). If the measured TDS is higher and if O-ring leakage is not indicated, extended cleaning is needed.

Before cleaning the RO elements, make connections to form a closed loop. Add chemical solutions used in cleaning in the clean/flush tank. The chemical solutions are sent through the cleaning loop by the feedwater booster pump and the high-pressure pump. Open the cleaning bypass valve to bypass the media filter. The product utility hose returns product water to the clean/flush tank. The cleaning return valve and hose return the cleaning solution to the clean/flush tank.

- System flush. Make a preliminary flush before cleaning the RO. Always precede cleaning procedures by backwashing the media filter and replacing the cartridge filters. Follow the procedures outlined in TM 5-4610-232-12 to perform both the preliminary and complete flushes.
- Heat-up and set-up. You are now ready to start the heat-up and set-up procedures. The high--pressure pump is the source of heat used to heat the detergent. Make certain you follow the Cautions and Warnings in TM 5-4610-232-12 when working with detergent.
- Detergent clean. Use caution when using detergent. Failure to do so could result in severe burns, especially to your eyes. Always wear chemical gloves and a face shield. If caustic detergent comes in contact with your skin or clothes, wash off immediately. If detergent comes in contact with your eyes, wash them immediately with clean water from the eyewash station. Begin the detergent cleaning by making certain the level of water in the clean/flush tank is below the chemical port. If the level is above the port, open the tank drain valve until the level is below the port and use the procedures in TM 5-4610-232-12. After the detergent cleaning, you have three choices: you can return to normal operations, you can shut down to long-term secured status, or you can continue with the extended cleaning by performing the citric acid cleaning. To complete start-up from here, you would follow the procedures listed in TM 5-4610-232-12.
- Citric acid cleaning. Unless specifically directed, use citric acid cleaning for extended cleaning only. It may precede or follow the detergent cleaning, depending on the source water and circumstances. Use caution when using citric acid. Failure to do so could result in burns. Always wear chemical gloves and a face shield. If citric acid comes in contact with your skin or clothes, wash it off immediately. If citric acid comes in contact with your eyes, wash them immediately with clean water from the eyewash station.

Table 4-1. Computation for product water TDS

	TEMPERATURE (°F/°C)			
WATER SOURCE	**32/0**	**55/13**	**77/25**	**95/35**
1. Fresh Water (Up to 1,500 ppm)	1.25	1.6	2.0	2.5
2. Brackish Water (1,500 to 15,000 ppm)	1.5	1.75	2.0	2.5
3. Seawater	2.0	2.5	3.0	3.5

To compute the maximum product TDS as a percent of source water TDS, use the following example as a guide.

Brackish water, 10,000 ppm at 77°F
Maximum TDS = 2%

$$= 10{,}000 \times \frac{2}{100} = 200 \text{ ppm}$$

Section IV

150,000-GPD ROWPU

SITE SELECTION

Each of the assemblies must rest on a level, solid surface. The site must allow for easy drainage away from the assemblies. Large, heavy components, such as multimedia filters, should be staked out prior to actual emplacement. This assumes you have done the initial preparations (installation of cartridges and membranes, for example).

COMPONENT ASSEMBLY AND EMPLACEMENT

Before the 150,000-GPD RO WPU system can be operated, its individual components must be assembled and emplaced. These procedures are covered in more detail below.

Raw Water Pump

Locate the raw water pump assembly near a water source and within 500 feet of the boost pump assembly. Connect as many hard-walled suction hose lengths as needed, but no more than 95 feet, to reach the water source. Couple the foot valve to one end of the hose and couple the other end to the raw water pump inlet. Couple as many collapsible hose sections as needed, but no more than 500 feet, to connect the raw water pump to the boost pump.

Boost Pump

Locate the boost pump assembly no more than 18 feet from the pretreatment assembly. Connect the collapsible hose from the discharge side of the boost pump to the pretreatment assembly inlet.

Pretreatment Assembly

Connect the pretreatment assembly to the multimedia filters using collapsible hoses. The pretreatment assembly must be within 12 feet of the multimedia filters. Install vent valves in the multimedia filters. Install coagulant aid and scale inhibitor drums and feeder pumps. Connect the pretreatment assembly outlet to the high-pressure pump inlet.

RO Block

Attach the high-pressure discharge hose from the high-pressure pump to the RO block. Attach collapsible hoses from the product water and brine water connections on the RO block. Insert the control box cable from the pretreatment skid into the socket on the high-pressure pump.

PRESTART CHECKS

A number of checks must be made of the ROWPU system before it is put in operation. Prior to start-up, complete the following actions:

- Verify connections of all equipment and connecting hoses according to the system layout. If this is the first start-up after loading or cleaning the RO membrane elements, do not connect the RO product output hose to storage until you have operated the equipment for about 20 minutes and checked the TDS of the product water. This allows any foreign material or contaminated cleaning chemicals to flush away. Do not return contaminated product water to the area where you are drawing raw water.
- Verify that the diesel engine-driven raw water pump, boost pump, and high-pressure pump are serviced, operational, and properly connected. Check oil level and condition of the diesel engine.
- Verify that the multimedia filters are loaded with media and initially backwashes and rinsed in preparation for normal operation.
- Verify that the cartridge filters have been loaded per TM 5-4610-229-10.
- Verify that the RO membrane elements have been loaded per TM 5-4610-229-10.
- Complete all before-operation PMCS.
- Position all valves for normal operation as listed in Table 4-2 (page 4-11).
- Verify that a drum of coagulant aid and a drum of scale inhibitor are connected to their respective feeder pumps.

START-UP PROCEDURES

A number of steps must be followed to startup the ROWPU system after the prestart checks have been completed. To start up the system, do the following:

- Start the raw water pump diesel engine. Adjust the engine throttle to achieve a raw water pressure of 50 psig at the raw water pressure gauge.

- Observe the vent valves on top of the multimedia filters as the filters are filling with water. When the valves have closed, the filters are full of water.
- Start the boost pump diesel engine. Allow it to run at 45 to 50 psig, as indicated on the feedwater pressure gauge.
- Start injection of coagulant aid and scale inhibitor by starting the chemical metering pumps. Adjust the pump settings given in Table 4-3 (page 4-12).
- Observe the feedwater flowmeter. It should now indicate less than 350 GPM.
- Increase pressure at the feedwater pressure gauge to approximately 100 psi by increasing the throttle setting on the boost pump diesel engine.
- Start the high-pressure pump diesel engine. Set the engine speed at a fast idle for five minutes.
- Increase the throttle setting of the high-pressure pump diesel engine slowly to increase the reading on the feedwater flow gauge to 350 GPM. Continue to monitor the feedwater pressure gauge, raising the speed of the boost pump as required to maintain 100 psi. It may be necessary to increase the speed of the raw water pump slightly to assure that pressure at the boost pump inlet is sufficient to maintain a hard hose. However, no product flow should be indicated on the product water flow gauge.
- Increase the speed of the high-pressure pump slowly while gradually closing the brine throttling valve to achieve a reading not to exceed 108 GPM on the product water flow gauge. Observe the brine concentrate pressure gauge at the same time. Do not let the pressure exceed 820 psi. Pressure readings on the brine concentrate pressure gauge will vary depending on salinity of the raw water source.
- Immediately check the feedwater flowmeter to ensure that the feedwater flow rate is 350 GPM. If it is less than 350 GPM, increase the high-pressure pump speed and simultaneously open the brine throttling valve to finally arrive at a maximum of 350 GPM.

NOTE: If the feedwater flow rate does not climb with this adjustment, check the raw water and boost pump pressure readings and adjust to normal operating limits.

Table 4-2. Normal operation valve positions

VALVE NUMBER	POSITION	FILTER NO./VALVE FUNCTION
V-1	Pointer Right	F-1/Service
V-2	Pointer Right	F-2/Service
V-3	Pointer Right	F-3/Service
V-4	Pointer Left	Service
V-5	Pointer Horizontal	Closed
V-6	Closed	Backwash
V-7	One-half Open	Brine Throttling

Table 4-3. Pump settings

PUMP NUMBER	CHEMICAL	STROKE SETTING	SPEED SETTING	DOSE RATE
P-2	Coagulant Aid	50	35	1.0 PPM
P-4	Scale Inhibitor	100	46	4.0 PPM

NOTE: Inspect water stream at test port (filter F-4 drain valve) to ensure the filtered water has less than 1 JTU.

SYSTEM SHUTDOWN

The 150K ROWPU is designed to operate continuously in normal operation until manually shut down. In normal operation, you may manually start and stop the ROWPU equipment as often as needed to maintain the desired product water supply. Such short-term starts and stops involve only starting or stopping the pumps, checking the water flow rate, and adjusting the appropriate controls as needed. For longer than short-term, shut down the ROWPU as follows, in the order listed:

- Open the brine concentrate throttling valve. This will reduce the pressure applied across the membranes and allow the RO block to be flushed.
- Gradually reduce the speed of the high-pressure pump to low idle by pushing in the engine throttle. To prevent damage to the turbocharger, let the engine run for five minutes at low idle before stopping the engine completely.
- Push in the Kill Start lever to shut down the engine.
- Shut off the chemical metering pumps.
- Bring the raw water pump and boost pump diesel engines to idle for five minutes.
- Flip the boost pump control switch down to stop the boost pump.
- Push in the stop button or flip down the control switch (depending on pump model) to stop the raw water pump.

PREPARATION FOR MOVEMENT

Before the 150,000-GPD ROWPU system is moved, you must prepare the system and its components. After performing the shutdown procedures described previously, prepare the system as follows:

- Disconnect all connecting water hoses and open the cartridge filter and multimedia filter drain valves to allow water to drain from the unit. If necessary, backwash the multimedia filter prior to movement.
- Replace the filter cartridges. Be sure all internal parts and the filter body are dry before installing new filter cartridges and reassembling.
- Install all hose connector covers, making certain that all seal rings are in place.
- Clean all external surfaces thoroughly to remove any corrosion or other foreign matter. Clean all surfaces except the electrical parts with warm soapy water and a stiff bristle brush and flush with clean water.
- Clean the electrical control box by wiping it with a cloth moistened with silicone spray lubricant or similar substance.
- Remove any corrosion by wire brushing or sanding. Touch up the paint, as necessary, to prevent further corrosion.
- Prepare the RO block assembly for movement by installing hose connector covers and making certain that all seal rings are in place. Remove RO membrane elements from the pressure tubes. Submerge each membrane element in a bath containing 1 percent formaldehyde solution for about three to five minutes. Place each membrane element in a polyethylene sleeve or plastic bag. Heat seal the sleeve or bag. Store the membrane elements indoors with a temperature range from 40°F to 120°F.

MAINTENANCE

To maintain the 150,000-GPD ROWPU in operating condition, you must periodically perform a number of maintenance services. These services are described in detail below.

Multimedia Filter Backwash

The backwash procedure uses filtered water from two of the filters to backwash the third one. During this procedure, turn off both chemical feed pumps and the high-pressure RO pump. Use the raw water and the booster pumps, as required, to establish the flow needed. The backwash procedure includes slow backwash, fast backwash, slow backwash again, and finally back to service. The backwash and rinse flow rates are adjusted by valve V-6. The exact amount of flow required depends on the water temperature: the cooler the water, the less flow is required; the warmer the water, the higher the flow required. For the backwash procedure, a feedwater temperature of 77°F is assumed as noted from the feedwater temperature indicator. At that temperature, the required flow rates are 160 GPM for slow backwash and 270 GPM for fast backwash. Refer to Table 4-4 (page 4-13) for flow rates at other temperatures.

RO Membrane Cleaning

Perform the RO membrane cleaning procedure if the ROWPU's output deteriorates to an unacceptable, level because of reduced membrane efficiency. Perform these step-by-step cleaning procedures on an operating system which has been producing potable water and which can be found in TM 5-4610-229-10. Prior to starting this cleaning procedure, make sure you have the following equipment on hand: disconnect adapter, suction adapter assembly, hose coupling with 1- to 2-foot length of suction hose, and membrane cleaning compound (Hydrakleen-20).

Table 4-4. Backwash flow for various temperatures

TEMPERATURE (DEGREE F)	SLOW BACKWASH (GPM)	FAST BACKWASH (GPM)
55	115	180
60	125	200
65	135	220
70	144	240
75	153	255
80	162	270
85	170	285
90	177	300
95	184	315
100	191	325
105	198	334
110	204	342
115	210	350
120	216	355
125	222	360

Cartridge Filter Elements Replacement

Replace the cartridge filter elements when the differential pressure across the filter (the difference in pressure readings from PI-2 and PI-3) reaches 12 psig or more. The cartridge filter body contains 12 disposable filter elements. To replace filter elements, shut down operations and follow the procedures in TM 5-4610-229-10.

RO Membrane Element Replacement

Two operators are required for removing RO membrane elements. Be sure all pumps and feeders are off. Remove the RO membrane elements from the pressure tubes as detailed in TM 5-4610-229-10. Remember to push RO membrane elements from the pressure tube in the same direction as the feedwater flows. Push out the elements one at a time, using the unloading device. Support each RO membrane element until it is free of the pressure tube as it is being pushed out from the opposite end. Delay loading of the RO membrane elements until ready for system start-up. Otherwise, they may become wet prematurely, making their storage a consideration until ready to place the system into operation.

Multimedia Filter Media Replacement

The multimedia filters are loaded with new filter media at the factory. The old filter media is usually removed and discarded when proper flow and filtration can no longer be attained by means of backwashing. Avoid breathing dust from the filter media. Use an approved dust mask well-fitted to the face. Failure to comply can result in severe respiratory disorders and eventual death. Remove contaminated filter media by laying the filter unit on its side with the manway near the ground, fully open to access, and the bottom of the filter slightly elevated (about one foot off the ground). Remove the media from the tank by first reversing circulation to fluidize the media bed and allowing free flow of the fluidized media out at the manway. When no more media will flow from the tank, continue backflow while jetting the sand with a hose. Finally, it may be necessary to shut off backflow, enter the tank, and finish removing the last of the media by hand. Use care to avoid damage to coating on the inside of the filter body and manhole cover. When standing inside the filter body, be particularly careful to remove shoes/boots and to place feet carefully on the tank lining material. Do not step on or otherwise overstress any part of the underdrain assembly during erecting of the underdrain components or subsequent loading of the filter media. Refer to TM 5-4610-229-10 for more detailed guidance on filter media replacement.

Section V

PRODUCTION REPORTS

DAILY WATER PRODUCTION LOGS

Daily water production logs are important because the information from these forms is used to schedule resupply of POL, chemicals, and maintenance. For this reason, the data entered on the production log should be complete and accurate. The daily water production log can tell you the quality of the raw water source by showing the amount of chemicals needed to make it potable. This will help in the future if you have to use the same or a similar source for a water point. See Figure 4-4 (page 4-15) and Figure 4-5 (page 4-16) for a sample completed form. Reproduce DA Form 1713-R locally on 8 1/2- by 1l-inch paper. A reproducible copy is in the back of this FM.

The following is guidance on completing the header portion of DA Form 1713-R.

The Water Point No/ROWPU No. Each water point will have a different number assigned to it as there will probably be two or more water points in different areas of the operation. Additionally, log each ROWPU by serial number. This will allow accurate measurement of each ROWPU's production time, consumption rates, and maintenance status. By using different numbers, you will be able to keep the information on each water point and each ROWPU separate,

NCO *in Charge.* By entering the name of the operator of the ROWPU, you know who is responsible for each ROWPU on each shift.

Shift No. By entering the shift number, you will have more information about shift operation of a specific ROWPU.

DAILY WATER PRODUCTION LOG - ROWPU

For use of this form, see FM 10-52-1 the proponent agency is TRADOC

SHIFT NO 0600 - 1800

PART I. HOURLY CHEMICAL DOSAGE LOG

WATER POINT NO ROWPU NO 3 | NCO IN CHARGE SGT Greene | DATE 29 Mar 91

TIME		CITRIC ACID		SODIUM HEX		CHLORINE		POLYMER		pH		CHLORINE RESIDUAL (ppm)	REMARKS
ON	OFF	KNOB SETTING	CHARGE (Lb)	KNOB SETTING	CHARGE (Lb)	KNOB SETTING	CHARGE (Lb)	KNOB SETTING	CHARGE (ml)	RAW	FIBERS		
0600		10	0.75	2.2	0.1	2.4	0.2	2.4	53.5	5.5	6.0	5	Temp 75°
0630		10		2.2		2.4		2.4		5.5	6.0	4	Citric Acid
0700		10		2.2		3.0		2.4		5.5	6.0	5	not used
0730		10		2.2		3.0		2.4		5.5	6.0	5	
0800		10		2.2		3.0		2.4		5.5	6.0	5	
0830		10		2.2	0.1	3.0	0.2	2.4	53.5	5.5	6.0	5	
0900		10		2.2		3.0		2.4		5.5	6.0	5	
0930		10		2.2		3.0		2.4		5.5	6.0	5	
1000		10		2.2		3.0		2.4		5.5	6.0	5	
1030		10		2.2		3.0		2.4		5.5	6.0	5	
1100		10		2.2	0.1	3.0	0.2	2.4	53.5	5.5	6.0	5	
1130		10		2.2		3.0		2.4		5.5	6.0	5	
1200	1200	10		2.2		3.0		2.4		5.5	6.0	5	
													Backwash and change cartridge
Chemicals Used		.75		.3		.6		160.5				SIGNATURE OF NCO IN CHARGE WHEN COMPLETED	
Chemicals On Hand		30 lbs		50 lbs		45 lbs		800 ml's				Barry M. Greene	

DA FORM 1713-R, MAY 91 EDITION OF FEB 85 IS OBSOLETE

Figure 4-4. DA Form 1713-R, Daily Water Production Log-ROWPU (front)

PART II. GAUGE AND INDICATOR LOG

WATER POINT NO ROWPU NO: 3 | DATE: 29 Mar 91 | SHIFT NO: 0600-1800

TIME ON	TIME OFF	PRODUCT WATER FLOW GPM	REVERSE OSMOSIS PRESSURE PSI	CARTRIDGE FILTER PSID	MULTIMEDIA FILTER PSID	RAW WATER FLOW GPM	BRINE FLOW GPM	REVERSE OSMOSIS VESSELS PSID	TOTAL DISSOLVED SOLIDS PPM	REMARKS
0600		14	300	4	2	30	16	80	210	
0630		14	300	4	2	30	16	80	210	
0700		14	300	4	2	30	16	80	210	
0730		14	300	4	2	30	16	80	210	
0800		12	300	5	3	30	18	80	210	
0830		12	300	5	3	30	18	80	210	
0900		12	300	6	4	30	18	80	210	
0930		12	300	7	5	30	18	80	300	
1000		12	300	8	6	30	18	85	300	
1030		12	300	8	8	30	18	90	300	
1100		12	300	8	8	30	18	90	300	
1130		12	300	10	10	30	18	95	300	
1200	1200	12	300	12	12	30	18	100	300	
Backwash media filter and replace cartridge filters.										

Total Hours Operated			POL Used			POL on Hand		
				Gasoline (Gal.) diesel	16		Gasoline (Gal.)	100
0600	1200	6		Oil (Qt.)	1		Oil (Qt.)	24
				Grease (Lb.)	None		Grease (Lb.)	1/2

REVERSE. DA FORM 1713-R. MAY 91

Figure 4-5. DA Form 1713-R, Daily Water Production Log-ROWPU (back)

Date. At the start of each new day, enter the date. By checking the forms over a period of time, you can make an accurate estimate of the amount of chemicals and POL needed for extended operation.

The following is guidance on completing the front of DA Form 1713-R. These columns will give you a report of the settings on the chemical pumps and the total amount of each chemical used during each operating shift, by water point number and ROWPU serial number.

Time. Enter the time the ROWPU was started and the time the equipment was shut down. This will give you the hours the ROWPU was in operation for the day. If available storage is filled and the ROWPU is put into standby, log operation stop and restart times. Also log the time the ROWPU is shut down for maintenance.

Citric Acid, Sodium Hex, Chlorine, and Polymer. Enter the initial knob setting and amount of chemical used for the initial charge. Make a separate log entry every time you recharge any of the chemical feed pumps. Also make a log entry if you change the knob settings. You should also make a log entry of the turbidity reading from the media filter every time you change the knob settings on the polymer pump.

pH. Enter the initial pH reading of the raw water and the pH from the product water. Also enter a periodic pH reading of raw and product water, noting the time of the reading in the Time column. Take these readings whenever a significant event occurs that would have an effect on the pH of treated water, and, in any event, at least every two hours. Also, log pH readings conducted during RO element cleaning.

Chlorine Residual. Enter the residual reading taken from the product water after at least 30 minutes contact time. Repeat at 30-minute intervals. Also note a temperature reading of the water. This would allow for correct chemical computation of chlorine based on temperature of the water.

Remarks. Enter the reason that the production of water was halted (for example, backwashing, RO cleaning, cartridge filter replacement). Also note any significant event that may affect water point operations.

Chemicals Used. Enter the total amount of each chemical used for the shift. Start a new form for each shift.

Chemicals on Hand. Enter the total amount of each chemical you have on hand for this ROWPU at the end of the shift. This amount should equal the Chemicals on Hand total from the previous shift minus the Chemicals Used totals. If they do not match, make a note in the Remarks column to explain the difference. If you receive supplies during your shift, note the amount of each chemical received in the Remarks column and add it to the Chemicals on Hand column. If supplies are issued to another ROWPU or another water unit, make a note in the Remarks column. Subtract the amount of each chemical issued from the Chemicals on Hand column.

The following is guidance on completing the back of DA Form 1713-R. These columns will give you a report of the flow rates and operating pressures within the ROWPU during each operating shift by water point number and ROWPU serial number. These readings should be made hourly throughout the shift to monitor the operational condition of the ROWPU. The operator must take prescribed operational or maintenance steps based on these readings. Therefore, it is important that these readings be done frequently and accurately. This side of the form also allows you to compute the total gallons of product water purified on each shift. The bottom of the form is used as a daily inventory of POL. The amounts of POL and chemicals used during that shift are recorded as well as the balance left on hand at the end of the shift, By knowing the amount of POL and chemicals used per day and the amount you have on hand at the site, you will be able to order supplies before you run out.

Time. Enter the time you started the ROWPU and the time that the equipment was shut down. This will give the hours the ROWPU was in operation for the day. If available storage is filled and the ROWPU is put into stand-by, log the stop and restart times. Also log the time the ROWPUis shut down for maintenance.

Product Water Flow. Enter the reading from the product water flow gauge on the ROWPU. This reading should be the normal operating flow after initial start-up and should be measured continuously during operation.

Reverse Osmosis Pressure. Enter the reading from the RO pressure gauge. This reading should be the normal operating pressure for the source water (fresh, brackish, or salt). Take this reading and record it every hour during normal operations.

Cartridge Filter. Enter the pressure differential reading from the cartridge filter. This is the difference in pressure from the top to the bottom of the filter and indicates the status of the cartridges. When the pressure differential exceeds the established limit, replace the cartridges. When replacing cartridge filters, log the time you shut down and start up the ROWPU. Note the replacement in the Remarks column.

Media Filter. Enter the pressure differential reading from the media filter. This is the difference in pressure from the top to the bottom of the filter and indicates the status of the media. When the pressure differential exceeds the established limit, backwash the media filter. When backwashing the media filter, log the time you shut down and start up the ROWPU. Note that a backwash was conducted in the Remarks column.

Raw Water Flow. Enter the reading from the raw water flow gauge. You must maintain the proper flow of water into the ROWPU at all times. The ROWPU can sustain serious damage if sufficient flow is not maintained.

Brine Flow. Enter the reading from the brine flow gauge: Use this reading as an indicator of the status of your RO elements. If one or more of the elements fail, you would see a radical increase in the brine flow. Use this reading during RO element cleaning.

Reverse Osmosis Vessels. Enter the pressure differential reading from the RO vessels. This is the difference in pressure from the feedwater side to the product water side of the membrane. When the pressure differential exceeds the established limit, clean the RO elements. When cleaning the RO elements, log the time you shutdown and start up the ROWPU. Note the cleaning in the Remarks column. Also, note the flow rate readings that occur during the cleaning process.

Total Dissolved Solids. Enter the TDS reading. This reading can come from either the meters equipped on the ROWPU or from the individual TDS meter assigned to the operators. In either case, the TDS reading is made on the raw water (fresh, brackish, or salt) to determine production rates. TDS readings are also made on the product water from each bank of RO elements to determine if there has been membrane failure. Note in the Remarks column where the TDS reading is from.

Section VI

POL AND CHEMICAL REQUIREMENTS

POL REQUIREMENTS

To plan for resupply of POL in support of continuous water operations, you must know how much of each item is needed, where it will be needed, and when it will be needed. The how, where, and when are closely related. They all depend on the unit mission, the environment, how the mission is to be accomplished, and the unique characteristics of the unit. Plan ahead. Estimate fuel consumption as soon as possible so that adequate supplies can be requested and on hand when needed. The number of pieces of fuel-consuming equipment at each water point must be known to determine petroleum needs.

You are responsible for estimating your petroleum needs and submitting them in a timely manner. You must determine your unit's initial needs and report changes in consumption that warrant an adjustment in the supply distribution system. The most accurate method of estimating petroleum requirements is based on unit historical data which reflects the variables of weather, terrain, organizational strength, and operational vehicles and equipment. Use actual experience data when conditions are similar and data is reliable and has been verified.

Compute POL requirements on a scheduled basis, usually weekly or monthly. Consider the following factors when you calculate petroleum requirements.

Displacement. Consider the average distance and how often each vehicle moves. You need less fuel to move a unit over roads than to move a unit across country.

Supply. Certain vehicles must make round trip supply hauls during a displacement. Since the trips are made to supply points located at varying distances from the unit, determine an average round trip supply distance.

Service. Daily supplemental needs exist for moving vehicles in bivouac areas, for reconnaissance, for engine warm-up, and for long periods of low-gear operations. These are service requirements. Petroleum consumption depends on the nature of the operation, weather, roads, and terrain.

Housekeeping. Additional daily needs exist for gasoline-powered equipment and for operations, maintenance, and testing of power generators.

Waste. Waste covers evaporation, spills, and small combat losses. Compute it only when a unit is moving over roads in the combat zone. It is not included in the bulk estimate when the unit is moving over roads in the COMMZ or cross-country. Compute waste as 10 percent of the sum of all other consumption figures.

Stationary equipment. This factor applies to fuel-consuming equipment which does not provide its own power to move. Generators and gas-driven pumps are examples of such equipment. This type of equipment will operate 20 hours a day.

CHEMICAL REQUIREMENTS

Review the completed daily production logs to determine the amount of chemicals used per day. This historical data will provide you with a good guideline to follow in estimating the amount of chemicals required. Review the logs over a period of time, not just one or two days. A key to your estimate will be the number of hours the equipment will be required to operate to support the mission. When estimating the amount of chemicals required to accomplish the mission, consider the following factors.

Chemical Needs

The chemicals needed to operate ROWPUs are polymer, citric acid, sodium hex, sodium bisulfite, and calcium hypochlorite. The chemicals you should estimate are the ones for your unit's authorized equipment.

Waste

During operation, waste is a common occurrence. Chemicals may be wasted by spills and small losses. You must plan ahead and include waste in your total chemical requirement. The waste factor for all chemicals is 15 percent. Add this factor to all chemical totals to ensure that enough chemicals are available for the successful completion of the mission.

Required Chemicals

In order to determine the required chemicals for a water support mission, you must know the type of equipment you have, the estimated hours of operation, the equipment consumption rates, and type of source water. Reliance on historical chemical consumption is the best method of determining resupply rates and initial supply quantities.

CHAPTER 5

Storage Operations

Section I

STORAGE OPERATIONS AT PURIFICATION SITES

DS STORAGE

In DS operations, maintain water storage at water production sites in 3,000-gallon collapsible fabric bags called onion tanks. A combination of stored water and available raw water provides the estimated command water reserve stock. Storage facilities must be large enough to meet the daily peak demands. This helps to eliminate long waits at the water point by consumers and allows water production units to remain operating for extended periods of time. Having sufficient storage capability also avoids frequent time-consuming and inefficient start-ups and shutdowns of the water purifiers.

Site Selection

Choose a site that is free from sharp objects (for example, rocks, sticks, and glass) which could cut or puncture the tank. The collapsible fabric water tank may be installed on a slope of up to 10 percent (l-foot rise in 10 feet of distance), but the tank base should not rest over abrupt drop-offs of greater than 4 inches.

Equipment Unpacking

When unpacking the tank, inspect for damage incurred during movement. Check the equipment against the packing slip to see if the shipment is complete. Report all discrepancies according to the instructions in DA Pamphlet 738-750. Also check to see whether the equipment has been modified.

Installation Instructions

Use care when unpacking the tank. The tank can be easily damaged by tools, packing box nails, or other sharp objects. Each tank is provided with suitable packing.

If this is the first time you are using a new tank, carefully open the shipping container and remove the tank and packing material. If you are exchanging a tank, package the unserviceable tank in the empty container in the same manner that the new tank was packaged.

Set the tank on the ground with the three carrying handles up. Remove the four straps from the D-rings to release the bundle. Unfold the cover from around the tank. Then lift the tank from the cover and set it in the center of your cleared site. Unroll the tank and unfold the sides. Remember to perform the before-operation PMCS prior to filling the tank. Fully spread out the tank, open end up, in the installation area.

Remove the foot bellows and hose from the repair pouch, and connect the hose to the foot bellows. Thread the foot bellows hose into one of the inflation valves in the tank collar. Open the inflation valve by turning the center part of the valve clockwise. Close the remaining inflation valves. Operate the foot bellows to inflate the collar until it is firm, but do not overinflate as the collar may be damaged if overinflated (maximum air pressure is 0.5 psi). You may inflate the tank collar by attaching a standard automotive pump to the automotive valve on the collar. Once you inflate the collar to the proper pressure, close the inflation valve by turning the center part of the valve counterclockwise. Now unthread the foot bellows hose from the inflation valve on the collar. and thread it onto the inflation valve in the cover float. Open the inflation valve on the float, and

inflate it with the foot bellows. Inflate it to 0.5 psi. Overpressure may cause damage. Once both are inflated, disconnect the hose from the foot bellows, and store these items in the repair pouch.

Remove either the dust plug from the filler fitting or the dust cap from the discharge fitting. The filler fitting provides a 2-inch female coupling end, and the discharge fitting provides a 2-inch male end. Use either, or both, for filling the tank. Connect the water supply line from the water purifier to the fitting and begin filling the tank. Do not exceed the capacity of the tank. If you do not have a metering gauge available, the tank is full when the water level reaches the lower edge of the tank's collar. A maximum of 3,000 gallons of water may be put into the tank.

While the tank is being filled, place the cover (float side down) in position on top of the tank. Turn off and remove the supply line when the tank is full. You may wish to install a gate valve on the filler/discharge ports of the tank. This will allow you to remove or add hoses without loss of the product water. When placing the cover over the top of the filled tank, align the 10 handles around the edge of the cover with the 10 handle toggles around the tank. Loop the cover handles over the handle toggles, pull the handle toggles down over the handles, and tuck the ends under the rope to secure the cover into position. This provides protection to the product water from incidental or deliberate contamination.

Initial Adjustment and Daily Checks

You do not need initial adjustments for the water tank. You should check the tank collar and cover float daily for adequate inflation. Adjust air pressure as required, remembering not to overinflate (0.5 psi maximum).

Water Issuance

Issue water from the tank from either the filler or the discharge port. Remove the dust cap or plug, connect a 2-inch line that goes to either a nozzle or a distribution pump (such as the 125-GPM diesel or the 65-GPM electric), and you are ready to issue water. Remember, if you are using a pump, you must use a hard-walled, 2-inch hose connection from the tank to the pump.

PREPARATION FOR MOVEMENT OF DS STORAGE

Several factors are involved in moving DS water operations. Take the following actions when preparing to move DS storage.

To prepare for moving the tank, first drain all water from the tank by opening either the filler or the discharge port. Disconnect the 10 handles around the edge of the cover from the 10 handle toggles. Next, remove the cover and deflate the float and the tank collar. When the tank is being taken out of service, make sure that the inflation valves remain open. You may damage the tank collar and cover float if the valves are closed during movement or storage. Clean the outside of the tank, cover it with a mild detergent/water solution, and rinse it thoroughly with clean water. Allow the cover and outside of the tank to dry thoroughly. Using the inside lift handles, suspend the tank, inside out. Do not lift or move the tank with the lift handles if there is any water remaining in the bottom of the tank. Damage to the handles or tank fabric may occur. If needed, clean the inside of the tank with a mild detergent/water solution, and rinse thoroughly with clean water. Keep the tank suspended until dry.

When possible, make sure the tank is completely dry before beginning to fold it. Water will mildew, decreasing the life of the tank. Brush off stones, grass, or other debris that may accumulate on the tank. Lay the tank out flat on the ground, with the tank collar up. Grasp one side of the tank (not with a filler/discharge port), and fold inward, toward the center. Grasp the opposite side of the tank and fold inward, over the first fold. Fold any overhang of the second fold back on top of itself. Starting at one end of the tank, tightly roll up the tank. Use two soldiers for this job to ensure that a tight bundle results. Lay the cover out flat, float side up. Lay the rolled-up tank on the cover, with its length perpendicular to the two-fold line. If the fold lines have worn off the cover, the length of the tank should run parallel to the ends of the cover. Fold one side of the cover, along the fold line, in and over the tank. Fold the other side of the cover, along the fold line, in and over the first fold. Fold the end of the cover with the D-rings up and over the tank. Fold the other end of the cover in so that the straps are brought to the underside edge of the fold. Grasp the enclosed tank, and tightly roll the bundle over onto the protruding end of the cover.

Pull the straps under the D-rings. Bring back over the first D-ring and under the second D-ring. Pull snug to secure the bundle. The resulting bundle should be tightly packed, with the three carrying handles up.

REPAIR

There are two types of repairs to the tank: emergency and unit repair. Perform emergency repair when cuts or punctures occur in the tank when it is in use. Emergency repair items consist of wood plugs and sealing clamps and are stored in the repair pouch on the outside wall of the tank. Unit maintenance repair consists of patching cuts and punctures in the tank fabric.

Emergency Repair

In emergency situations, you can use wood plugs or sealing clamps for repair. The use of each is described below.

Wood plugs. In emergencies, as an immediate temporary measure, use the wood plugs for sealing small holes or punctures. The size of the hole or tear will determine the size of the wood plug to be used. For holes or tears up to 1/2 inch in size, use the 3-inch plug. For holes or tears up to 1 1/2 inches in size, use the 5-inch plug. Select the size plug needed to fit (seal) the tank puncture, dip the plug in water, insert it in the hole, and twist clockwise until the leak is either stopped or slowed. Make follow-up inspections of the wood plug, as possible tightening may be necessary if the leak does not stop. If a leak is not stopped with the plug, use a small sealing clamp.

Sealing clamps. You can repair small slits, tears, or cuts (not to exceed 6 inches in length) with sealing clamps. The size of the damaged area or opening will govern the size of the clamp needed. For holes or tears less than 2 inches in length, use the 3-inch clamp. For holes or tears 2 to 4 inches in length, use the 5-inch clamp. For holes or tears 4 to 6 inches in length, use the 7 1/2-inch clamp. It may be necessary to increase the size of the tear slightly in order to insert the bottom plate of the clamp. Loop the cord around your wrist to prevent the loss of the clamp into the tank. Slip the bottom plate of the clamp through the hole or tear, and rotate it until it is centered and its length runs with the tear. Pull the bottom plate up against the fabric of the tank and slide the top plate down the cord onto the threaded stud on the bottom plate. With both plates now aligned, tighten the wing nut to clamp the tank wall between the two plates. Tighten just enough to stop the leak. If pliers are used, do not overtighten, as you might strip the stud threads or damage the tank fabric.

Unit Repair

Do not proceed with unit repair of the onion tank until you read and understand the following definitions and general instructions. Repairs will not succeed if these instructions are not followed.

Definitions. The following definitions define the three states of the patching adhesive as referred to in this task. The definitions apply after the adhesive has been mixed and applied to the tank fabric.

Wet. Press one knuckle down into the adhesive. Lift slowly. If adhesive is left on the knuckle, it is wet. Knuckle may or may not lift the fabric briefly.

Dry. Press one knuckle down into the adhesive. Lift slowly. If the knuckle does not lift the fabric briefly and no adhesive is left on the knuckle, it is dry.

Tacky. Press one knuckle into the adhesive. Lift slowly. When knuckle lifts fabric briefly and no adhesive is left on the knuckle, it is tacky.

General instructions. The following are general instructions. For more specific repair procedures, refer to TM 5-5430-225-12.

Patching of the tank fabric must not be done if the temperature is less than 60° F. Patching must be done in an area which will remain dry and at a minimum surrounding temperature of 60° F for 48 hours.

Tank fabric should be completely dry before beginning repair.

Tank fabric which holds water must have two patches: one on the inside and one on the outside. Apply the inside patch (water side) first.

Tank fabric which does not hold water needs only one outside patch.

Do not mix adhesive before ready to begin repair. Maximum shelf life of mixed adhesive is eight hours.

If patch must be applied in an area where it will come into contact with a previously installed patch, use emery cloth to smooth down the edges of the existing patch. There must be a smooth transition to the tank fabric.

Section II

BULK STORAGE OPERATIONS

BULK STORAGE

In areas where DS water systems are not capable of providing enough water supply, GSUs provide this capability. Purified water is introduced into the water distribution system from purification points located on- and off-shore. Water enters the system through the base terminal storage facility, where it is distributed to other terminals within the COMMZ and forwarded into the corps area by TWDS. The base terminal can vary in size from 800,000 to 1,600,000 gallons. These GS water terminals consist of 50,000-gallon collapsible fabric tanks. DS bulk water storage systems are designed to receive water from SMFTs that move water supplies from the GS water units in the corps /COMMZ into the division/brigade area. The 40,000- and 300,000-gallon PWS/DSs are intended for use by divisional water supply elements when required to issue potable water obtained from GS water supply sources. The 300,000-gallon system is equipped with sixteen 20,000-gallon collapsible fabric tanks configured either as one 300,000-gallon tank farm or as two 160,000-gallon tank farms. The 40,000-gallon system is equipped with two 20,000-gallon tanks.

MOVEMENT PLANS FOR THE PWS/DS

General factors are involved in the movement of GS water storage operations. Review the following steps prior to moving GS storage.

Planning

Before moving a PWS/DS, you must develop a movement plan. First, find out how much time you need to prepare crews and equipment for the move. You should complete some tasks before the move. These include surveying the area into which you will move, coordinating with engineer units, and developing a flow plan. Make sure all personnel and necessary equipment are on hand when beginning the move.

Area Survey

Go over the area where you will locate the supply point. Look it over, and decide where to place the entire supply point. After choosing the area, consider what type of arrangement you need for the PWS/DS to ensure that the system will fit the situation and the terrain. Also, decide where to put the truck parking areas, the bulk storage areas (20,000-gallon collapsible tanks), and the distribution equipment areas.

Engineer Support

When surveying the new location for the first time, take a member of an engineer unit with you. After choosing the sites for each part of the supply point, give this information to the engineer. With this information, the engineer unit can prepare individual tank sites, remove underbrush, clear truck parking areas, and build improved roads through the site, if they are needed. If engineer support is not available, your unit will have to prepare the site.

Flow Plan

After selecting the specific site for the actual parts of the water supply point, develop a flow plan. The flow plan will assist in determining whether personnel are handling the water and containers too much. The flow plan identifies steps that can be eliminated, combined, or changed to make the operation more efficient. It can also indicate unnecessary delays in handling and transporting of the product. When developing the plan, consider

the location of the storage and distribution equipment. Consider the flow of traffic through the supply point. Permit only one-way traffic in the supply point. Study the area and make a flow plan before the supply point moves to the new location.

Personnel

Make sure that all personnel are on hand for the move to the new site. Since the PWS/DS is designed as an arid augmentation package, the unit will receive additional personnel.

Equipment

Make sure the PWS/DS equipment is on hand and ready for use. If any items are not working or are missing, repair or replace them before you move. List the major items of equipment in your system. Request sufficient transportation assets to move the equipment to the new site.

Loading Plan

A loading plan is a management tool used for moving equipment and personnel efficiently and effectively. The plan for loading equipment and personnel should apply to every type of transportation available. Complete the plan before the move to allow time for loading safely. When preparing the loading plan, base the contents on all the types of transportation; the number of personnel available; and the type, size, weight, and quantity of supplies and equipment to be loaded and in what sequence. Remember the last item loaded is the first item unloaded. Always consider the priority of loading and the safety of equipment and supplies in transit. Design the plan to permit quick and efficient unloading and regrouping of personnel and equipment.

METHODS OF MOVING

Moving the PWS/DS consists of taking it down at one place, loading it on transporters, and moving it to a new site. There are two ways to do this: the one used depends upon the situation. The first method is to move the entire system in one move. The second way is to move the system by leapfrogging. Leapfrogging means that half of the system is moved to the new location, leaving the other half at the old site for limited support. In using this method, support to the consumer is not interrupted during the move. In either method, first transfer water into some type of transporter, such as a SMFT. Inform the drivers of the transporters where the new location will be or where to meet to transfer the load to other tank vehicles. Use the transporters to store and issue water on a temporary basis at the old and new supply points. Start to take down the supply point as soon as the storage tanks are empty. Base the sequence in which the equipment is taken down on the needs at the sites. Usually, dismantling of the PWS/DS comes first unless you use the leapfrog method. It is important to work quickly once the order is given to move. The primary concern is to become operational at the new location as soon as possible.

SITE SELECTION FOR THE PWS/DS

The next higher HQ will assign an area of operations. The section leader must choose a site within that area. Locate the water supply point as close to supported units as dispersion factors, sources of supply, and the tactical situation permit. Use vacated sites or available existing facilities. The site chosen should be reasonably level and well drained to prevent water damage to the equipment. Cover and concealment are important factors to consider when selecting a new site. Select a location that gives adequate cover from enemy observation and attack. The site should be large enough to meet the needs of water storage and distribution plans but not so large that handling operations become inefficient. The site should have easy access to road nets and have at least one road that runs through the supply point. Do not choose sites that are near important communication centers or near heavily populated areas that could be enemy targets. There should be two large areas for truck parking or staging areas. The site should be large enough to add more equipment if needed. When selecting the site for the supply point, the main items to consider are cover and concealment, road networks, dispersion factors, terrain, and site preparation.

Cover and Concealment

When considering cover and concealment, select a site that is in the woods or in a treeline where natural shadows disguise the shapes of the equipment. Always use camouflage nets whenever possible. When laying out the operation, make use of the natural terrain contours and vegetation to break straight lines.

Road Nets

The site chosen for the distribution and receiving points should be next to a road in the water supply point. Loading or unloading trucks and distribution to consumers can be done without leaving the road nets in the supply point. Ensure that there is only one-way traffic.

Dispersion Factors

Consider the distance between pieces of equipment when selecting the location for the PWS/DS. The distance can vary with the terrain, natural cover, concealment, hose availability, and the road nets.

Terrain

Select level terrain for the PWS/DS. Look for a site without slopes. A large slope will cause filled tanks to roll. Put the pumps and the distribution equipment on level ground. Try to place the distribution pumps at a slightly lower elevation than the collapsible tanks to ensure suction at the pump.

Site Preparation

The four major items of equipment to position in the PWS/DS are the collapsible tanks, the pumps, the hypochlorinator, and the distribution equipment. Clear the entire tank farm of all sharp objects that might puncture the tanks, such as stones or sticks. The tank sites should slope gently towards the discharge manifold end to help drain the tanks. For more complete emptying of the tanks, a sump approximately 36 by 36 by 2 inches should be dug under the drain fitting to provide a low area for the water to collect. If a dike is needed, it should have an internal volume equivalent to or greater than the volume of the tank (20,000 gallons or 2,700 cubic feet). If an engineer unit is available to assist in site preparation, give it this information.

PWS/DS LAYOUT

Lay out the PWS/DS to take advantage of the terrain, natural cover, concealment, available hose, and road nets. The standard arrangements for the PWS/DS are shown at Figure 5-1 (page 5-7) and Figure 5-2 (page 5-8). If these arrangements are not suitable for the site, rearrange them to suit the needs of the site. The supply point equipment will arrive by means of a convoy. Give the drivers the exact location of the site. Someone must be at the location prior to the convoy getting there. The area should be well suited for off-loading of the equipment. If the site has been prepared by the engineers, begin off-loading and laying-out operations. If the site has not been prepared by the engineers, it is the water unit's responsibility to do so. The first and major concern is to receive and issue potable water as soon as possible. For this reason, off-load and lay out the storage tanks first, then off-load and lay out the distribution operations. The best way to layout the PWS/DSis to put the 20,000-gallon collapsible tanks in their prepared sites first. Then put the pumps and hypochlorination unit in place, and lay out all the fitting assemblies and hoses. Make the connections, and attach the water distribution nozzles.

The 20,000-Gallon Collapsible Tanks

Preparing the 20,000-gallon collapsible tanks is relatively simple. Place the tanks in the prepared sites so that, when unfolded, they are in position. Be careful not to step on the tanks when unfolding them. Inspect the tank fabric for cuts, sags, or other possible damage. Also, ensure that the tank filler and vent assemblies are in good working order.

Pumps

After putting the 125-GPM and the 350-GPM pumping assemblies in place, lower the retractable support and chock the wheels of the 350-GPM pump.

Hypochlorinator

After placing the hypochlorinator in position, put the shims under the skids to help keep the hypochlorinator level. Then, raise the cover of the unit to ensure its serviceability.

Stations

There are four types of stations provided in the system: 4-inch loading stations, 2-inch loading stations, dispensing stations, and bag-filler stations. By connecting the 350-GPM pump as the discharge pump, water can be pumped through the 4-inch hose section to and from SMFTs. There are four to eight 2-inch loading stations. The 2-inch loading stations utilize 20-foot, 2-inch

hoses. Quick-acting valves are used to control water flow through these hoses. There are four dispensing stations. These stations deliver water through hand-held nozzles. The third station, the bag-filler station, delivers water through a 1 1/2-inch hose to a nozzle kit for filling 5-gallon plastic bags. There are three bag-filler stations in the system.

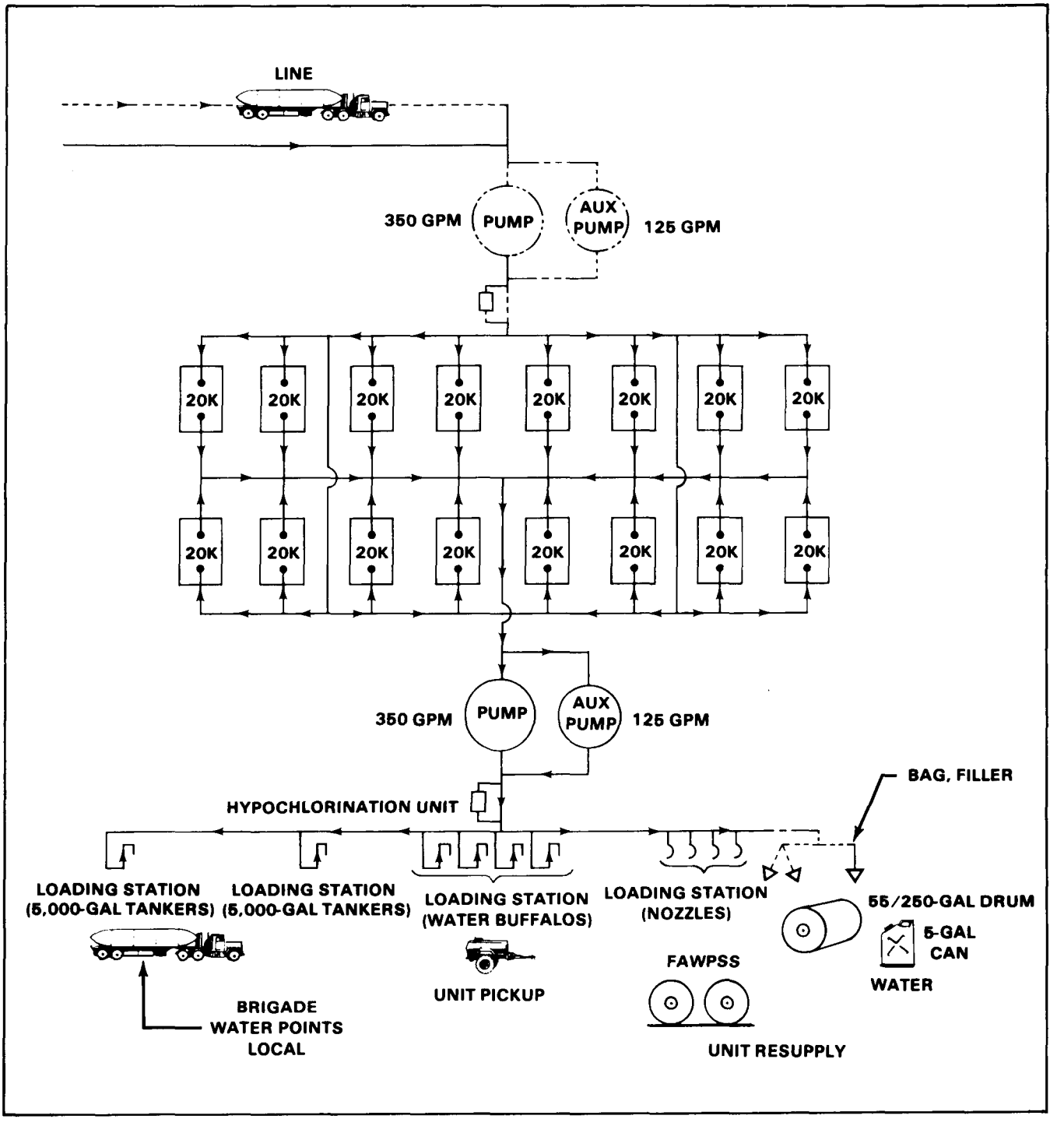

Figure 5-1. The 300,000-gallon PWS/DS

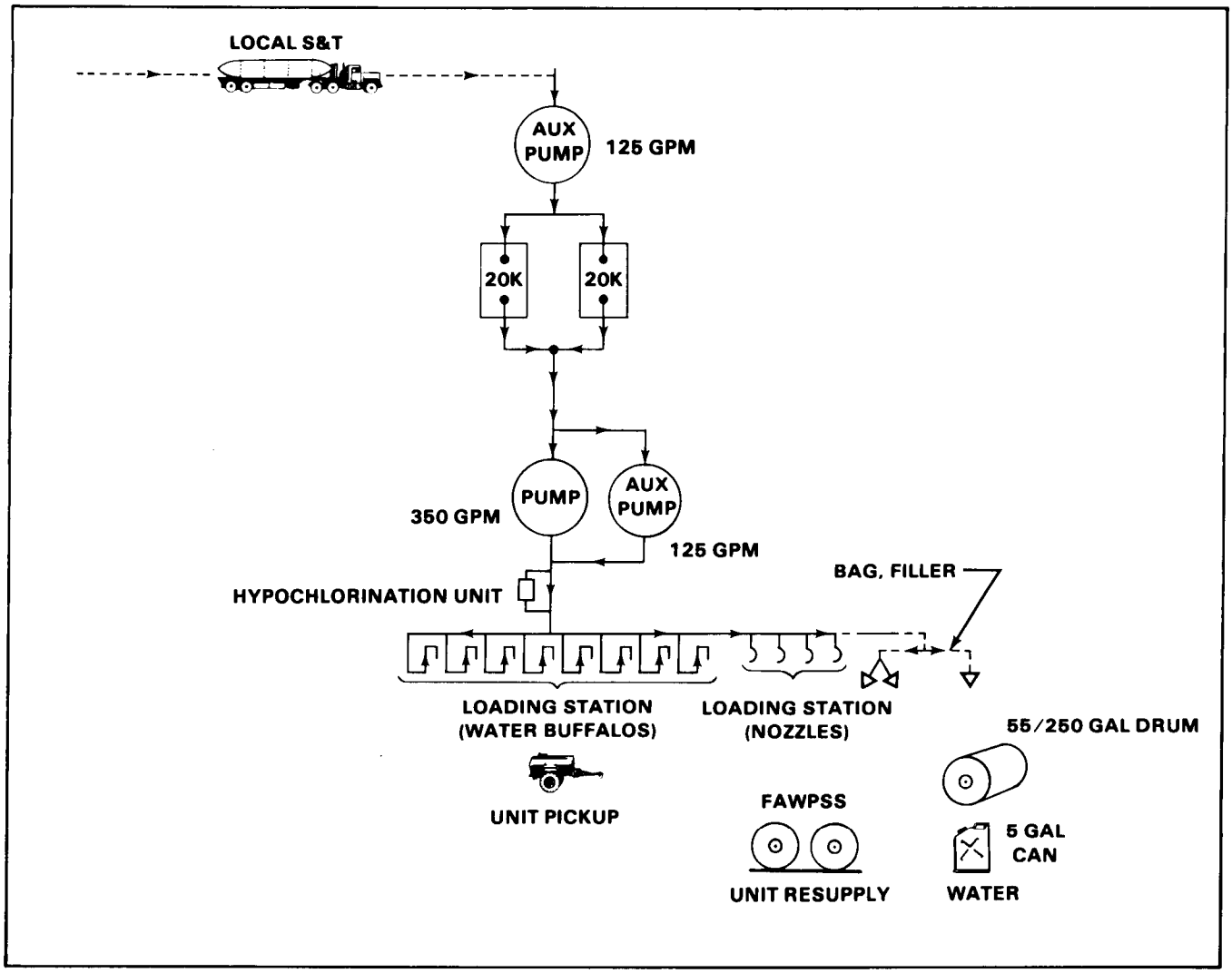

Figure 5-2. The 40,000-gallon PWS/DS

PWS/DS OPERATIONS

The system can be divided into four basic components: tanks, pumps, hypochlorinator, and distribution equipment. These basic components are described below.

Tanks

Each tank is a fabric collapsible tank that will hold 20,000 gallons. It has suction, discharge, drain, and vent openings.

Pumps for the 300,000-Gallon PWS/DS

Figure 5-1 (page 5-7) shows the location of the pumping systems in the 300,000-gallon PWS/DS. The 350-GPM pump is used to fill the tank and to distribute water to the loading stations. When filling the tank, water flows through inlet valves and then through the 4-inch hoses into the tank. Close outlet valves during the filling operation. During distribution to the loading station, the valve positions are reversed. The water, when dispensed, flows from the tank through the pump and then the hypochlorinator unit, after which distribution is made to the loading station.

Pumps for the 40,000-Gallon PWS/DS

Figure 5-2 **(page 5-8)** identifies the location of the pumping assemblies in the 40,000-gallon PWS/DS. The 125-GPM pump is used to fill the tanks and to distribute water to the loading

stations. When filling the tank, water flows through inlet valves, then through the 4-inch hoses into the tanks. Close outlet valves during the filling operation. During distribution to the loading stations, close inlet valves and open outlet valves. The water flows from the tank through the pump and then to the hypochlorinator unit, after which distribution is complete to the loading or dispensing station.

Hypochlorinator

The hypochlorinator is located in the part of the system leading from the discharge side of the pump to the loading or dispensing stations. The hypochlorinator has a bypass line which meters water flowing through it. This metering system causes a proportionate but smaller amount of water to flow through the hypochlorinator where a solution of chlorine is added. Bypass water and hypochlorinated water then mix downstream of the hypochlorinator unit prior to distribution at the loading stations.

Distribution Equipment

Two to eight hose connection kits, four nozzle connection kits, and one bag-filler connection kit comprise the water distribution system for the PWS/DS. Dispense water through any or all of these kits. Valves control the flow of water through each dispensing unit.

PERSONNEL ASSIGNMENTS

Proper use of assigned personnel is one of the most important parts of managing a water supply point. It is important that specific tasks be assigned to personnel at the water supply point. The best way to use all the personnel wisely is to let the job determine the assignment. For example, if no issues are scheduled for distribution, use personnel to improve the camouflage and concealment of the area, improve drainage ditches and roadways, and make sure equipment is serviceable. Although the number of persons assigned to a specific task may vary with the mission, it is still possible to obtain an average number for each operation. Eleven soldiers are needed to operate the PWS/DS efficiently.

Assign two soldiers to the receiving manifold. They are responsible for transferring water from the transporter to the storage system. They operate all valves at the receiving point and make all necessary hose connections.

Assign six soldiers to the pumps and control valves. Three of the six are on the receiving pumps and the other three are on the distribution pumps. On the receiving side, one person operates the pump and the other two control valves on the discharge and receiving manifold on the tanks. On the distribution side, one person operates each pump and the third person operates the hypochlorinator.

Assign three soldiers to the distribution, loading, and bag-filler stations. They are responsible for dispensing and controlling water flow. They must prepare the various filling points, operate the control valves, and make all necessary hose connections.

PWS/DS DISASSEMBLY

This paragraph contains guidance for shutting down and packing the PWS/DS prior to transferring the system to a new work site or returning it to storage. Because of the variety of installation arrangements possible with the PWS/DS, there is no single sequence of procedures for shutdown of the system. It is recommended, however, that as much water as possible be removed from the system while it is still intact. This involves using the 125-GPM pump to drain the storage tanks to remove as much water as possible before the pumps are disconnected. When emptying the storage tanks, it is not necessary to chlorinate the water removed, unless it is to be saved for future consumption. If the water is to be discarded, disconnect the hypochlorination unit before pumping water from the storage tank. Disassemble the system in reverse order of assembly. Perform the following steps prior to repacking:

- Drain, dry, and then cap and plug all hose assemblies.
- Drain and dry all metal assemblies, such as valves and tee assemblies. Cap and plug these items, as applicable.
- Remove and retain the two quick-disconnect elbows from the suction and discharge side port nipples on the top of each of the collapsible tanks. Then attach a protective cap to each of these nipples.
- Drain each tank by turning the gate wheel on the drain hose assembly which is attached to the drain fitting in the tank bottom. Remove the drain hose assembly and thread the protective plug into the tank drain fitting. Collapse, fold, and repack the tank into its container.

CHAPTER 6

DISTRIBUTION OPERATIONS

Section I

HOSE LINE DISTRIBUTION

GS DISTRIBUTION

In areas where DS water systems are not capable of providing enough water supply, GSUs provide this capability. Purified water is introduced into the water distribution system from purification points located onshore and offshore. Water enters the system through the base terminal storage facility where it is distributed to other terminals within the COMMZ and forwarded into the corps rear area by the TWDS. Water is moved forward from the corps rear area into the division and brigade support area by the SMFT. These two GS distribution systems will be discussed in more detail below.

TWDS

The TWDS is intended for operation by a water supply company or tactical water distribution team. The system consists of quick-laying fabric water hose lines, pumps, and fittings and can pump up to 600,000 GPD. The system is packaged with all items of equipment needed to lay 10 miles of hose line. The mission of the tactical water distribution team is to lay, operate, and retrieve the TWDS. These teams normally augment a water supply company to supplement that unit's bulk water distribution capability in a GS role. The TWDS transports potable water across level terrain for distances up to 10 miles. Water maybe stored in two 20,000-gallon collapsible fabric tanks, chlorinated and distributed to users, or used to supply PWS/DS. The following is an explanation of how each functional group contributes to the operation of the entire system.

Operate the hose line pumps in one of three modes: manual, electric manual, or electric automatic. In the manual mode, you control engine speed by manual movement of the throttle knob. Engine speed can be adjusted from a minimum of 1,000 RPM to a maximum of 2,500 RPM. In the electric manual mode, engine speed can be adjusted across the same range by manual movement of the speed control on the pressure regulator. In the electric automatic mode, engine speed is automatically adjusted by an electric speed control governor that is actuated by changes in water pressure at the pump suction port. During normal operations, the pump discharge pressure is 150 ±5 psi when pump suction pressure is above 20 psi. When pump suction pressure falls to 20 psi or less, the speed control governor reduces engine speed. At a suction pressure of lO psi or less, engine speed is reduced to idle (1,000 RPM) to prevent possible collapse of the suction line and damage to the unit. Similarly, if pump suction pressure rises above 120 psi, engine speed reduces to idle to prevent pump discharge pressure from exceeding 155 psi. This prevents possible hose line damage due to excessively high pressure.

The TWDS is designed so that the lead pumping station can be operated in the manual or electric manual modes while the downline boost pumping stations can be operated in the manual, electric manual, or automatic modes after the initial start-up. The lead pumping station must be constantly manned during TWDS operation while the boost

pumping stations operating in the electric automatic mode require only periodic monitoring and refueling. At a minimum, a crew must service each of the boost pumping stations every three hours while the TWDS is operating. If one of the boost pumping stations fails while unattended, the TWDS continues to operate at a reduced capacity.

When any pumping station is operated in the manual or electric manual modes, monitor for low suction pressure or high discharge pressure. Low suction pressure can result from improper spacing of the pumping stations; an obstruction, pinch point, or break in the upline hose line; a closed upline valve; or a disabled upline pump.

Filling a storage bag/tank may also cause a temporary loss in suction pressure to a downline pumping station. High discharge pressure can result from high suction pressure, a closed downline valve, or a pinch point or obstruction in the downline hose line. If pumping station suction pressure falls below 10 psi or if discharge pressure rises above 155 psi, manually reduce engine speed to idle until you identify and correct the reason for the improper condition.

Prime the pump at the lead pumping station before starting. Start the pumps at the downline boost pumping stations after the water column arrives from the lead or upline pumping station. It takes the advancing water column approximately 20 minutes to travel two miles. If a boost pumping station pump does not start when the water column arrives, close the butterfly valve at the suction port on the pump to prevent the arriving water column from rushing through the pump and creating a turbine effect which can damage the pump impeller. If this situation develops, monitor the upline pumps for an increase in discharge pressure above 155 psi. If the discharge pressure exceeds this limit, manually reduce engine speed to idle until you start the downline boost pump, or bypass the boost pump and allow the water column to proceed to the next downline boost pump. If discharge pressure still exceeds 155 psi, the upline pumps must be shut down and restarted when the downline pump becomes operational.

The lead pumping station is equipped with lengths of rigid-walled, wire-reinforced suction hose for connecting to the water source (PWS/DS). This hose does not collapse at low suction pressure. Each pumping station is equipped with a check valve installed in the discharge line. This check valve closes and prevents water from flowing back through the pump in the event of pumping station failure. A gear-actuated butterfly valve is installed in the suction and discharge lines. Close these valves to isolate and bypass the pumping station from the hose line.

SITE AND ROUTE SELECTION

Prior to installing TWDS equipment, you must thoroughly study the terrain. Determine a general route for the hose line and general locations for the pumping stations, storage assemblies, and distribution points from examination and comparison of maps, photographs, and charts. Some elements to be considered in selecting a route and installation sites for TWDS are:

- Whether TWDS will operate independently or as part of a large system.
- The assigned mission for TWDS (issue, distribution, or storage).
- Expected length of time TWDS will be required to operate.
- Elevation differences and distances TWDS will encounter along its route.

Organize a ground reconnaissance prior to installation of TWDS to determine exact locations for pumping stations, storage assemblies, and distribution points. If possible, site locations must be near or parallel to existing roads to ease transportation, assembly, inspection, maintenance, and disassembly of the system. Avoid routes along the banks of streams, marshes, ponds, gullies, ravines, or other areas subject to flooding. Whenever possible, the hose line is laid out on firm, dry, level ground that allows easy access and is not subject to flooding. Minimum requirements for selecting the route are a sketch of the proposed hose line route, odometer distances, and enough topographic information (surveying altimeter elevations) to establish relative altitude at various points along the hose line route. Use the following guidelines to gain maximum effectiveness for installation and operation of the system:

- The route must be direct and present a minimum number of obstacles and obstructions.
- A route parallel to a secondary all-weather road is preferable to one along a heavily traveled road.
- If roadways do not exist or cannot be used, select a route that is accessible to vehicles laying the hose line.

- Plan to locate a junction of two hose line lengths at installation sites for each boost pumping station and storage assembly.
- Keep security precautions in mind. Use natural camouflage whenever possible and avoid routing hose lines through populated areas.

In selecting pumping station installation sites, determine the location of the lead or first pumping station by location of the water source. Space pumping stations at two-mile intervals, assuming that the route is reasonably direct and the terrain is level. However, a substantial rise or fall in elevation along the hose line route may require adjustment of standard spacing intervals as follows:

- If the next downline pumping station is substantially higher in elevation than the upline pumping station, shorten the distance between them.
- If the next downline pumping station is substantially lower in elevation than the upline pumping station, lengthen the distance between them.

Adjustments to spacing between pumping stations (due to elevation change) assure that water pressure is maintained within optimum operational range. Under normal conditions, TWDS delivers water to the suction port of each boost pumping station at a pressure of 20 psig. When suction pressure falls below 20 psig, boost pumping stations are designed to begin reducing speed when operated in the electric automatic mode. Therefore, if an upline pumping station is substantially lower than the next downline station and the elevation difference has not been offset by spacing adjustments, suction pressure at the downline pumping station may fall below 20 psig and cause that pump to slow down. This, in turn, will cause remaining downline boost pumping stations to slow down, seriously degrading overall performance of the TWDS.

After you plot locations of pumping stations, check the ground profile for any sharp declines in elevation along the hose line route. An excessive drop in elevation significantly increases the pressure of water as it flows downhill. If pressure builds to 225 psi, the hose line can rupture and equipment failure results. Therefore, when the ground profile indicates a sharp elevation drop along the route, install a pressure-reducing valve in the hose line. To determine the location of the pressure-reducing valve, refer to the ground profile and the outline in TM 5-432-303-10. If elevation continues to drop excessively beyond the first pressure-reducing valve installation point, install a second pressure-reducing valve in the hose line.

In selecting a site for the storage assemblies, keep in mind you may not need the storage assemblies depending on the TWDS mission. Also, the storage assemblies must be installed near the junction of two 500-foot lengths of hose line. When selecting a site for installation of the distribution points, remember that, depending on the TWDS mission, the distribution points may not be required and the distribution points can only be installed in conjunction with a storage assembly.

TWDS INSTALLATION

Installing the 10-mile segment consists of installing a 6-inch, hard-walled suction hose to connect the lead pumping station and the water source; installing road-crossing guards and aerial suspensions as required; laying the hose line; and, if required, installing the pressure-reducing valve. Depending on the route selected for the hose line, the results of pressure loss/gain calculations, and the intended mission of the TWDS, the road-crossing guards, aerial suspensions, and pressure-reducing valve may not be required.

If one or all of these items need to be installed, transport the equipment to its respective installation site so that installation can occur in conjunction with the hose line-laying operation.

Install the hose line by first connecting the leading end of the upper length of the hose line to the butterfly valve on the discharge hose assembly at the lead pumping station using the victaulic coupling attached to the leading end of the hose line length. The hose is then flaked from the rear of a moving truck. Manually move the hose to a secure position. Connect the 500-foot lengths of hose line using victaulic couplings on the leading end of the hose line lengths. At every other connection, install a swivel joint. To install the swivel joints, use the victaulic coupling on the leading end of the hose line length and an additional victaulic coupling to connect the swivel joint to the trailing end of the next hose line length. When the truck moves forward along a predetermined route, the hose flakes out of

the flaking boxes and is laid out manually behind the truck. As the hose flakes out, pick it up and move it to a secure position 5 to 10 feet from the roadway. Straighten any bends or kinks in the hose line. Restrain the hose manually until the first 50 feet of hose is in place. After 50 feet of hose is in position, the weight of the hose will hold the line in place. The assistant driver must observe the hose-laying operation at the rear of the truck. He tells the driver to speed up, slow down, or stop the truck depending on the needs of the line walkers straightening and repositioning the hose line. Also, he must observe the hose as it flakes out of the flaking box for catching or binding. The recommended hose laying speed is approximately 3 MPH. The optimum speed of any hose-laying varies depending upon the terrain, available manpower, and how far the hose must be moved between the point at which it flakes off the truck and its final secured position. Do not leave the hose exposed on any roadway or track that is traveled by other vehicles. Retain empty flaking boxes, tailgates, and breakaway for repacking and redeployment. Connect subsequent truck loads of hose line to hose line already laid. Connect hose line to each boost pumping station, storage assembly, and, if required, the pressure-reducing valve as those installation sites are reached.

The overall manpower requirements for a hose line-laying or retrieval operation are shown in Table 6-1 (page 6-5). A minimum of two trucks with crews of five men each, alternately laying hose and reloading the trucks, is recommended for efficient hose laying. A crew consists of one supervisor, one truck driver, one assistant driver, and two line walkers. The assistant driver observes the actual flaking of the hose from the flaking boxes and the work of the line walkers. The assistant driver tells the driver to vary the speed of the truck according to the speed and needs of the line walkers and also stops the operation if there is a problem with the hose. A minimum of two line walkers follow behind each truck, straightening kinks or bends in the hose line. The line walkers are also responsible for picking up the hose line and moving it away from the roadway.

If the hose line must be laid across a roadway or railroad, the hose is laid under an existing bridge or through an existing culvert. Pull the leading end of the hose through the culvert using a rope. If no bridge or culvert is usable, construct expedient roadway crossings using the roadway crossing guards provided. The hose line must never be buried unprotected because the weight of the fill can collapse the hose, and any sharp rocks in contact with the hose can cause a puncture. Nail a plank to the bottom of the guard for greater hose protection. If it is necessary to lay the hose under a railroad bed, dig a tunnel beneath the gravel of the railbed (if possible). Do not lay the hose directly in the trench or railbed because the shifting gravel can gradually damage the hose.

Aerial suspensions are the most effective and readily installed means of crossing streams and deep gaps. Use suitably protected and secure suspension crossings in these cases. Make adequate provision to permit free passage of the displacement ball. For wide crossings, build a suspension bridge to provide a flat deck or floor to support the entire length of the hose and eliminate bends which occur if suspension cables were used. If available, install the hose line on an actively used bridge. If the hose line is installed on an actively used bridge, secure it outside the bridge structure. Crossings must not interfere with the passage of ships and must provide clearance from flood stages. Each hose line suspension kit provides adequate material for one 300-foot wide crossing or two shorter crossings. Materials for the construction of suspension towers are not included in the kit and must be obtained locally. When constructing suspension towers for spans up to 75 feet, short towers constructed of 4- by 4-inch timber or similar material can be used as long as adequate clearance is ensured. For spans over 75 feet, construct towers of 6- by 8-inch timber or similar material to provide adequate clearance and strength. Anchor all suspension towers by guy lines to pickets provided in the suspension kit.

If required, install the pressure-reducing valve at the location determined by calculations. To install the pressure-reducing valve, disconnect hose line lengths at the site designated for installation of the pressure-reducing valve by removing the victaulic coupling. Position the pressure-reducing valve between the hose line lengths with the directional arrow on the valve pointing in the direction of the water flow. Always place a pressure-relief valve on the pressure-reducing valve, on the upline side.

Table 6-1. Manpower requirements for TWDS operations

Hose laying	10 men and 2 trucks
Hose retrieval/repacking	14 men and 2 trucks
Installation of 5-foot road crossing guard	5 man-hours
Repositioning hose 5 to 10 feet from drop point to suitable position	8 man-hours/mile
Sustaining hose-laying rate equal to filling rate	50 men and 10 trucks
Hose retrieval	18 man-hours/mile

TWDS DISASSEMBLY AND PACKING

Disassembly of the 10-mile hose line segment requires the same tools, equipment, and personnel used to install the hose line. The displacement and evacuation kit and the packing kit will be required to pack the hose line segments into their flaking boxes.If a forklift is not available, the lifting sling will be required to load, unload, and stack the flaking boxes.

The hose line is evacuated by passing the displacement ball through the hose by air pressure. Place the ball receiver on one end of a 500-foot segment and place the pneumatic coupler on the other end. The 250-cfm air compressor supplies pressurized air (80 to 90 psi), forcing the ball through the hose and displacing any residual water.

Once the ball arrives at the receiver, the air compressor is shut off; pressurized air is released by opening the coupler; and the ball is removed from the receiver.

Compress the hose line by replacing the ball receiver with an end cap on the 500-foot hose segment that has just been evacuated. Install the ejector assembly on the pneumatic coupler and connect it to the air compressor. After 10 minutes of operation, the hose line will be collapsed. Remove the pneumatic coupler and ejector and place another end cap on the hose segment. This hose segment is now ready for recovery.

If properly compressed, the pullboards will not be needed to reflake the hose. Reflaking the hose is accomplished in the reverse order of flaking.

Section II

SMFT DISTRIBUTION

SMFT

Transportation medium truck companies use 5,000-gallon tanks for line haul of potable water from corps GS PWS/DSs to the division and brigade support area PWS/DSs in arid operations. DSUs use 3,000-gallon tanks for unit distribution to large consumers. The following describes the installation, operation, and repair of the SMFT.

Installing Tie-Down Kit

Prior to mounting the SMFT on a semitrailer, install the tie-down kit. Procedures for doing this are as follows.

Clear the truck bed of splinters, protruding nails, and other foreign objects that could puncture or chafe the tank.

Secure the tank to the trailer with a four-belt tie-down kit. There are two anchor points per belt to provide maximum support to the tank during transport. Each anchor point consists of a 5/8-inch-diameter eyebolt, two retaining plates, one 5/8-inch hex nut, and one lock-washer assembly.

Locate the anchor points as shown in Figure 6-1 (page 6-6), Figure 6-2 (page 6-7), and Figure 6-3

(page 6-8) and install as shown. Recheck the area for sharp objects. If the surface is rough and jagged, it will be necessary to place plywood or a tarpaulin for the tank to rest on.

Attach the ratchet take-up mechanism to each anchor point as shown in Figure 6-1 (page 6-6), Figure 6-2 (page 6-7), and Figure 6-3 (page 6-8) by placing the clevis of the ratchet take-up mechanism over the eyebolt anchor point. Join them with the clevis pin.

Lay the tie-down straps crosswise to the length of the semitrailer bed and at a slight diagonal. Accurately center the belts between the eyebolts. Let the remaining portion of the belts lie over the side of the trailer. Ensure that each strap is not twisted and is lying flat. The area is now prepared for tank unfolding.

Installing Tank on Trailer Bed

Do not walk unnecessarily on the tank, and only do so with soft-soled shoes. Do not drop sharp objects on the tank, such as wrenches or fittings,

Using a lifting device such as a forklift or crane, take hold of the sling assembly by its lift straps and place the tank on the semitrailer in such a manner that the tank will unroll towards the rear of the trailer. The tank end should be near or touching the trailer bulkhead.

Remove the straps from the buckles on the sling assembly, and unroll and unfold the tank over the tie-down straps. Visually inspect the tank while unrolling it. Position it so that when it is full, the ends or sidewalls of the tank will not rub against the forward bulkhead or hang over the sides of the trailer. Remove the sling assembly from under the tank, and place it in the trailer stowage compartment.

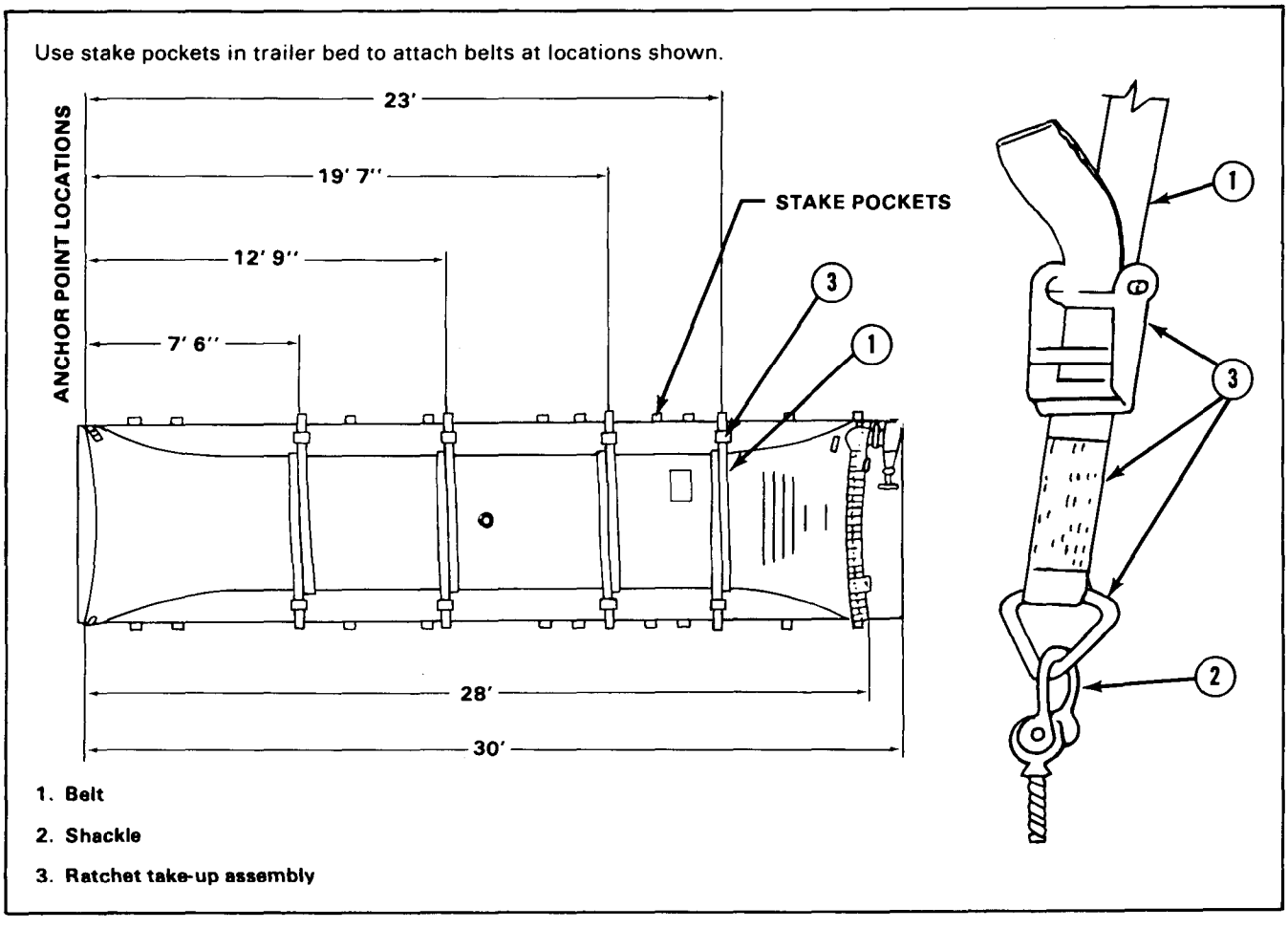

Figure 6-1. Anchor point location on 3,000-gallon SMFT (M-127 trailer)

Use stake pockets in trailer bed to attach belts at locations shown.

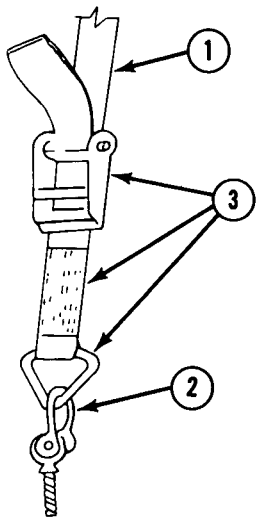

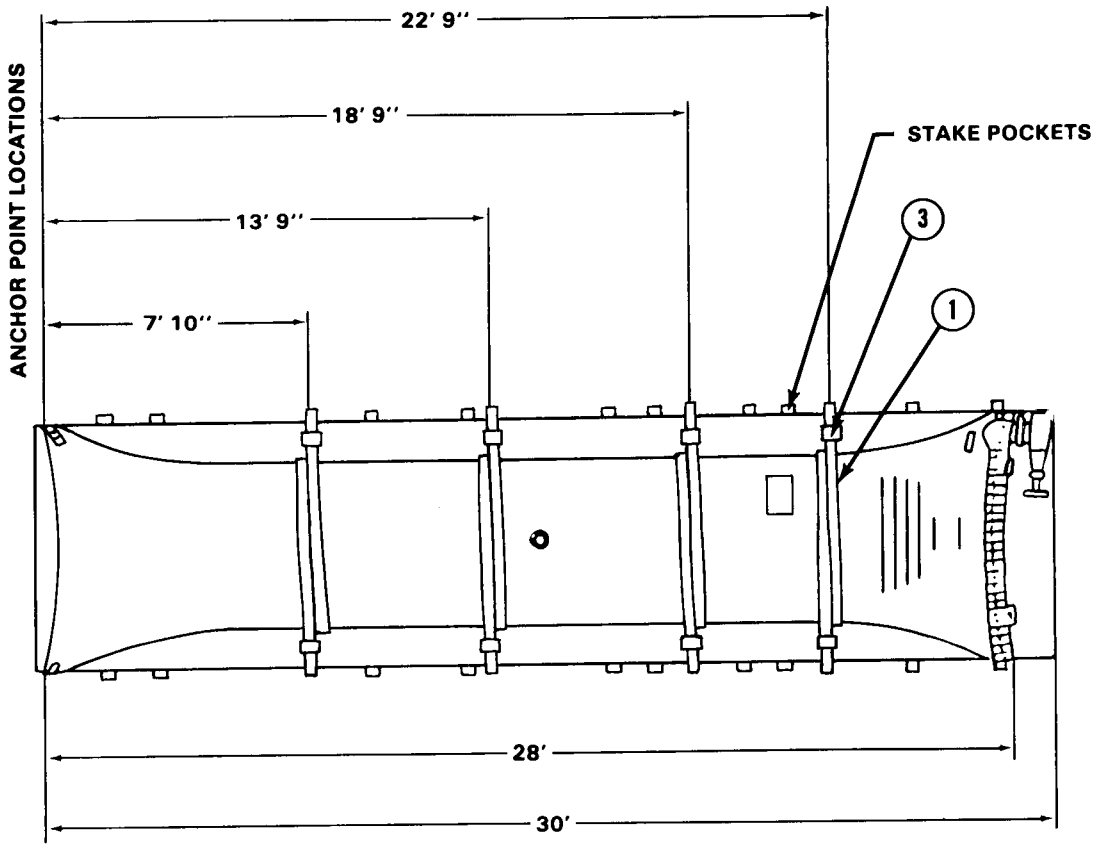

1. Belt
2. Shackle
3. Ratchet take-up assembly

Figure 6-2. Anchor point location on 3,000-gallon SMFT (M-871 trailer)

Use stake pockets in trailer bed to attach belts at locations shown.

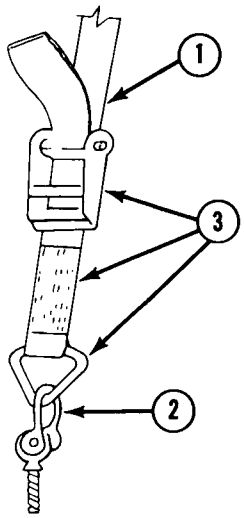

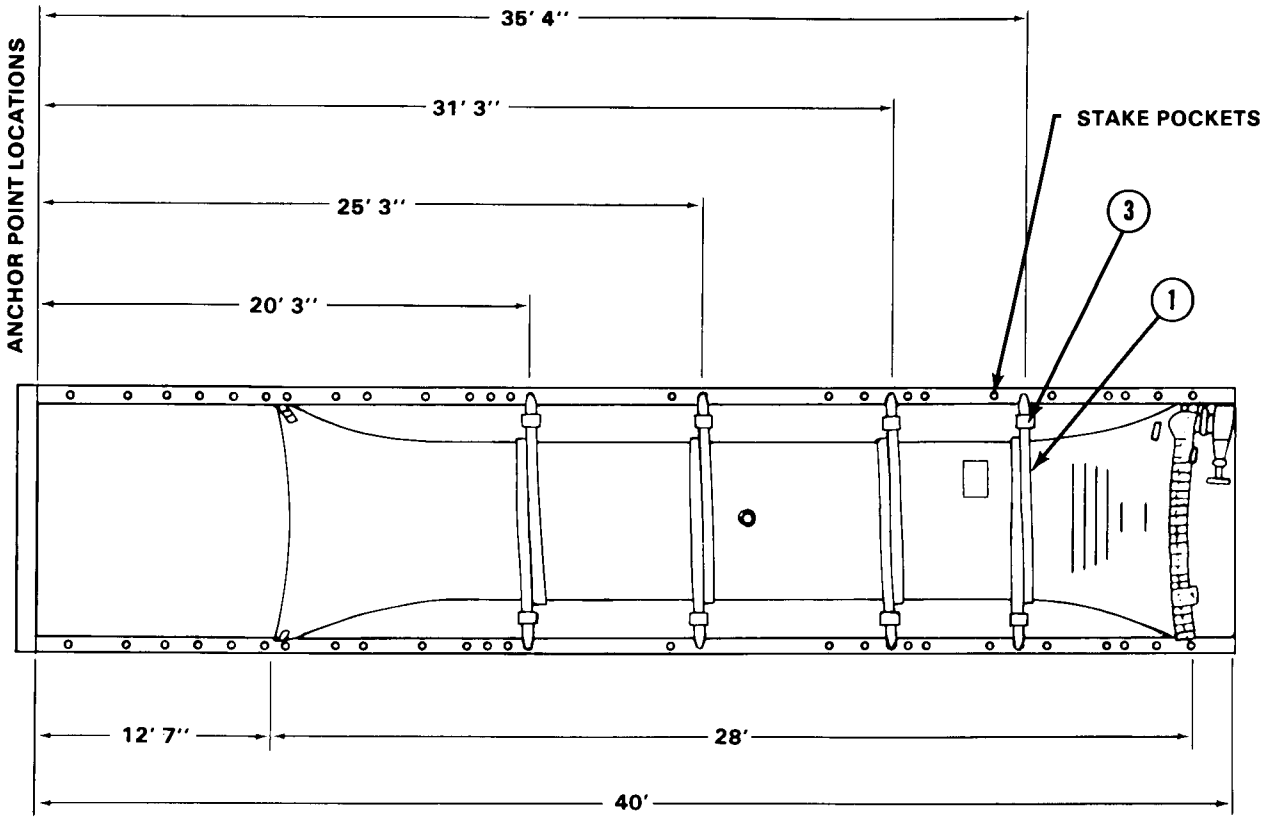

1. Belt
2. Shackle
3. Ratchet take-up assembly

Figure 6-3. Anchor point location on 5,000-gallon SMFT (M-872 trailer)

Filling the Tank

Before using the tank for the first time or after prolonged storage, flush the tank with superchlorinated water. Then proceed as described here.

Inspect the tank body for any punctures or tears. Inspect the fittings and components for evidence of damage or missing bolts or gaskets. Check to see that the tank is properly installed. The trailer bed should be level to prevent the tank from rolling.

Tighten all the bolts in the fittings. Use 70 ± 5 foot pounds torque on the l/2-inch-diameter bolts in the end clamps. The rubber in a new tank will cold-flow under the pressure and the torque will drop. Retorque tanks periodically until the rubber has set and the torque does not drop appreciably. If leakage is noted at the fittings or if the tank is subjected to hard usage, retighten the bolts.

Attach the pressure gauge to the filler/discharge valve. Open the pressure gauge valve.

Before starting to fill the tank, expel air from both the tank and the supply hose. After purging air from the tank, close the 4-inch tank inlet valve. After purging air from the supply hose, turn off the supply pump.

The free ends of the hold-down belts should now be brought over the top of the tank and down the other side through the ratchet take-up mechanism attached to the truck bed. Slide the ends of the belt through the slot in the ratchet assembly. Fold the end of the belt back, and hold manually until one turn has been taken on the roll-up spool.

Now attach the supply hose to the tank fill/discharge valve. You should have one soldier on the pump, one soldier controlling the hose, and one soldier visually inspecting the tank. Start the pump, and open the valve at the fill/discharge port on the tank.

No pressure will show on the pressure gauge until the tank is 2 feet high. From that point on, periodically check the exact tank pressure by closing the 4-inch filler/discharge valve on the tank to obtain a precise tank pressure reading. Bring the supply pump to idle while you are making this reading.

Continue filling the tank after the pressure reading has been taken until you reach 3 psi. At 3 psi, stop filling the tank.

Tighten the belts to the maximum possible with one hand on the ratchet handle. Use your hand to steady the ratchet assembly so that the belt will wind flat and true. If the tank ends are not level with the floor of the trailer, level the tank by releasing the ratchet on one side of the tank and then taking up the slack by tightening the opposite ratchet. After tightening each ratchet assembly, see that the ratchet handle has dropped securely into the locking mechanism. When all ratchet assemblies have been tightened uniformly, the pressure in the tank may increase approximately 1/2 psi.

Continue filling the tank while monitoring the pressure. The closed system of filling a tank allows the pressure to build up very rapidly as the tank reaches full capacity. Fill the tank to a final minimum pressure of 4 psi and a maximum of 6 psi.

After filling the tank to the correct pressure, shut off the filling hose valve. Next shut off the tank filler/discharge valve. Finally idle down and stop the pump. Disconnect the filling hose. You will experience some loss of water between the valves at this point. The water between the valves is under pressure: low pressure if the filling hose is shut off first as just described and high pressure if the tank valve is shut off first.

Close the pressure gauge valve and remove the gauge. The gauge is needed only to fill the tank. Keep the gauge in the cab of the tractor so it does not become damaged.

The tank is now properly filled and secured for transportation. Regularly check for tight belts. They should be tightened at least every two hours. The tank must be totally full or totally empty to be transported.

Emptying the Tank

Empty the tank by gravity or by the use of a pump. Both procedures are described below.

Empty by gravity. The end of the tank opposite the valve must be at least 8 inches to 10 inches higher than the valve end of the tank for complete tank emptying. The valve corner should be the lowest level of the tank. Use grade elevation or portable ramps under the trailer wheels. Connect one end of the 4-inch hose to the filler/discharge port. Connect the other end to the line or receiving

container. Open the filler/discharge valve on the tank to start the flow. After the tank is empty, close the filler/discharge valve and remove the hose. Unstrap the tank and roll it up to allow the transporter to backhaul if necessary.

Empty by pump. You will need at least two soldiers for this operation: one to operate the tank valve and one to operate the pump. Connect one end of the 4-inch hose to the tank filler/discharge port. Connect the other end of the hose to the suction side of the pump. Open the tank filler/discharge port. Start the pump and idle up. Determine the emptying rate by the capacity of the pump. After the tank is empty, idle and shut down the pump. Close the filler/discharge valve, and disconnect the 4-inch hose. The tank must be rolled up and secured to the bulkhead when not in use, even if the trailer is not being used to backhaul. If left flat and empty, the tank and valve will be damaged during movement.

Repairing the Tank

Repair the tank with sealing clamps or wooden plugs. Both repair procedures are described below.

Repairs with sealing clamps. Repair small slits, tears, or cuts (not to exceed 6 1/2 inches in length) with sealing clamps. The size of the damaged tank area (opening) needing repair governs the size of the clamp used to affect a tank repair. The following criteria are furnished as guidance in selection of appropriate size clamps:

- For holes (tears) up to 2 inches in length, install the 3-inch sealing clamp.
- For holes (tears) 2 to 4 inches in length, install the 5-inch sealing clamp.
- For holes (tears) 4 to 6 1/2 inches in length, install the 7 l/2-inch clamp.

It maybe necessary to increase the size of the tears slightly in order to be able to insert the bottom plate of the sealing clamp.

Slip the bottom plate of the sealing clamp through the hole or tear and rotate it until it is centered and parallel to the tear.

Center the top plate of the sealing clamp on the threaded shank and directly over the bottom plate.

Tighten the wing nut to securely clamp the tank wall between the two plates. Tighten enough to stop the leak, If pliers are used, do not exert extreme tightening that might strip the threads of the clamp stud or that might damage the tank fabric.

Repairs with wooden plugs. As an immediate, temporary measure in emergencies, use the furnished wooden plugs for expedient sealing of small holes or punctures. Select the plug size needed to fit (seal) the tank puncture, insert in the hole, and twist clockwise until the fit becomes quite snug and the tank leak is either stopped or slowed to the greatest possible degree. Follow-up regular inspection should be made of the inserted plugs, as possible tightening of the plugs may be necessary if the leak resumes. Later, if the leak is not totally stopped, the use of a small sealing clamp may become necessary. The size of hole or tear will determine the size of wooden plug to be used as follows:

- For holes (tears) up to approximately l/2inch in size, use the 3-inch long plug.
- For holes (tears) up to approximately 1 1/2 inches in size, use the 5-inch long plug.

REPACKING THE TANK

Figure 6-4, page 6-11, illustrates repacking procedures. Use the following procedures to pack the tank.

Begin by removing the pressure gauge. Disconnect and remove the hold-down kit ratchets. Hang the loose ends of the belts over the sides of the trailer.

Fold the tank almost in half lengthwise. Lay the top fold of the tank down approximately 1 foot shorter than the bottom fold. The ends will then be equal when the tank is rolled.

Begin to roll the tank. It is necessary that the first roll be circular and tight, otherwise the tank will be hard to roll and make a large package. After the first few uses, the tank will become more flexible and easier to roll and unroll.

Slip the sling around and under the tank if the tank is to be transported to a new trailer or placed back into its shipping box. The sling is located in the semitrailer stowage compartment.

Roll and store the belts, pressure gauge, ratchets, bolts, and plates in a prepared area, preferably in a box in the nose of the trailer. Pad the pressure gauge to avoid damage.

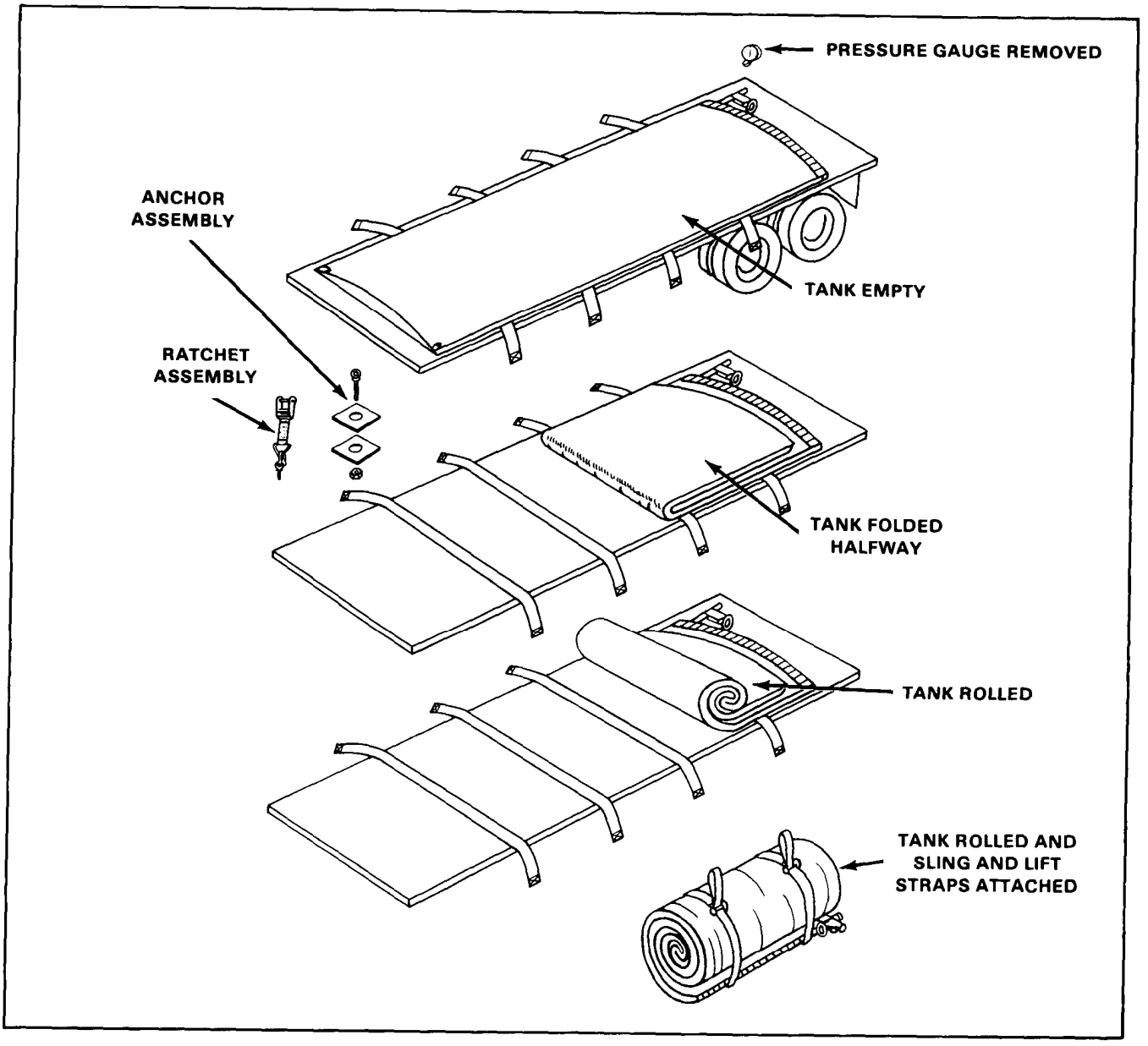

Figure 6-4. Repacking procedure for SMFT

Section III

FAWPSS DISTRIBUTION

FAWPSS

FAWPSS components are lightweight and air transportable. They can be delivered by LAPES, parachute airdrop, or sling load delivered by Army utility helicopter. The FAWPSS is also transportable by ocean cargo ship, rail car, standard military 5-ton cargo truck, or a semitrailer. The drums weigh approximately 4,500 pounds full and 300 pounds empty and are shaped like the 250-gallon drum. The remaining paragraphs of this section describe procedures for inventory, assembly, operation, and disassembly of the FAWPSS.

Inventory

Before performing the procedures described in this section, ensure that all components for one entire FAWPSS are on hand.

Each component of the FAWPSS has been labeled with a part number, identification number, or specification number. FAWPSS components are illustrated in Figure 6-5 (page 6-13) and identified in the component list (Table 6-2, page 6-14). The quantity of each is also given. The only activities required for assembly of the FAWPSS are unpacking and positioning the equipment and attachment of quick-disconnect assemblies. It is not necessary to use wrenches, screwdrivers, or other tools. In several instances, components are attached to one another at the factory.

Select a flat, solid, debris-free area with adequate terrain drainage. This area should measure approximately 30 feet by 120 feet and be free of overhead obstacles to permit delivery and removal of water storage drums by helicopter.

Note that some system components, while having similar names and a like appearance, are actually different. For instance, discharge water hose assemblies (items 6, 7, and 14 in Figure 6-5 and Table 6-2, pages 6-13 and 6-14) differ from each other. Be careful during assembly to avoid interchanging these and other similar items.

Assembly Procedures

When unpacking the FAWPSS containers, take care to avoid nails which can puncture drums and hoses.

In assembling the FAWPSS, first open the packing container. Remove and assemble or position the items in the order specified. Retain the packaging and packing containers for use during future recovery and system storage. Remove dust caps and plugs from each hose just prior to use of that assembly.

Place the 125-GPM centrifugal pump assembly in the center of the assembly area. Position the side of the pump that contains the male quick-disconnect coupling so that it faces toward the area where the four distribution nozzles are to be located. The side of the pump that contains the female quick-disconnect coupling then faces the area where the water storage and dispensing drums are to be located. Place the suction water hose assembly at the side of the centrifugal pump that contains the female quick-disconnect coupling. Attach the male end of the suction water hose assembly to the female quick-disconnect coupling on the centrifugal pump. Refer to TM 5-4320-208-12&P.

Use the towing and lifting yoke assembly as necessary to position two full water storage and dispensing drum assemblies. Make sure that the side of each tank which has the 2-inch elbow coupler is close enough to its respective suction water hose assembly to permit attachment.

Operation of the FAWPSS

The FAWPSS is used to issue water to supported units. Follow these procedures to operate the FAWPSS.

The FAWPSS is operated by a 125-GPM centrifugal pump. Six 500-gallon water storage and dispensing drums are attached and replaced, two at a time. Quick-disconnect couplings connect the drums to the balance of the system. These drums provide water by the suction of the pump through hoses, valves, and connecting assemblies to four distribution nozzles where the water is manually discharged. The rationale for authorizing six drums is based on two drums being filled while two are being transported and two are being used with the system.

To issue water, setup the FAWPSS assembly as shown in TM 5-4320-301-13&P. Prime the pump and start the centrifugal pump engine. Refer to TM 5-4320-208-12&P for operating instructions.

Check the entire system for leaks, beginning with the 2-inch elbow couplers on the water storage and dispensing drums. If you discover a leak, shut off the centrifugal pump engine. If the leak is at a quick-disconnect coupling assembly, open and remove the assembly. Inspect the hose assembly for abnormal twisting or ballooning which indicates that the hose is weak. Also check the couplings to be certain that sealing gaskets are in place and whether there is damage or the presence of foreign matter. If gaskets are damaged or missing, obtain these items from the overpack kit and replace. If couplings are damaged, replace the entire assembly with a spare assembly from the overpack kit. If foreign matter is present, thoroughly flush the hose. Refasten the assembly. Start the engine of the centrifugal pump, and repeat the above procedure until no leaks are seen.

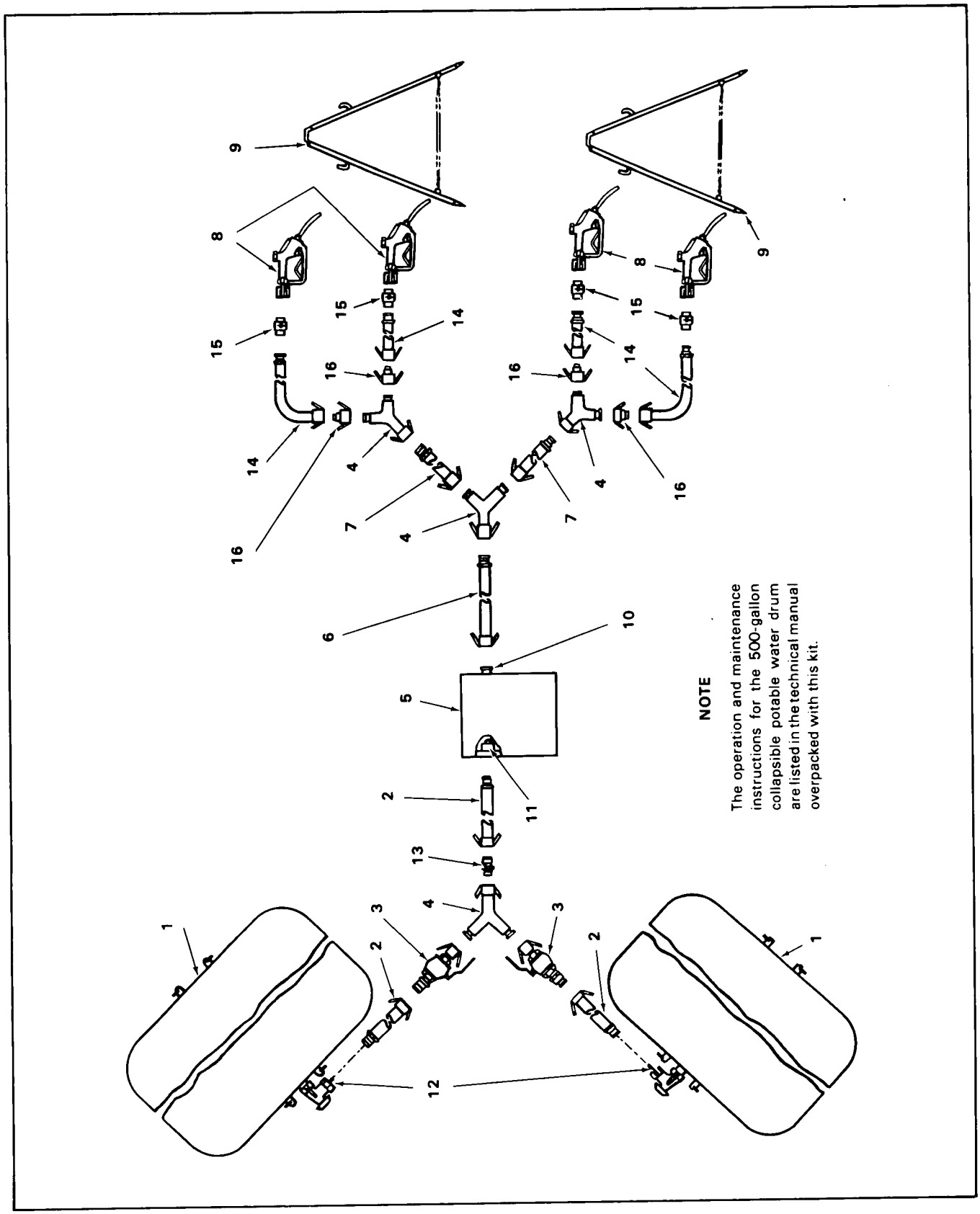

Figure 6-5. FAWPSS components

Table 6-2. FAWPSS component listing

PART/SPEC NUMBER	ITEM	DESCRIPTION	QTY
		Water Storage and Dispensing Drum Assy, consisting of:	6
(81349)MIL-D-43699SIZE2	1	*(1)* Collapsible Fabric Water Storage and Dispensing Drum, 500 gallon	
(97403)13219E0491-000	12	*(2)* 2-Inch Elbow Coupler	
(97403)13225E9135-001	2	Water Hose Assy, suction, 2-inch nominal size, 10-foot length	3
	3	Valve Assy*, consisting of:	2
(97403)13225E9137-002		*(1)* 2-Inch Bronze/Aluminum-Type Threaded Ball Valve	
(96906)MS27022-11		*(2)* Quick-Disconnect Coupling Half, cam-locking type, male	
(96906)MS27026-11		*(3)* Quick-Disconnect Coupling Half, cam-locking type, female	
(97403)13219E0477-000	4	Wye-Fitting Component	4
4320-00-542-3347	5	125-GPM Centrifugal Pump Assy*, including:	1
(96906)MS27022-11	10	*(1)* Quick-Disconnect Coupling Half, cam-locking type, male	
(96906)MS27024-11	11	*(2)* Quick-Disconnect Coupling Half, cam-locking type, female	
(97403)13225E9136-001	6	Water Hose Assy, Discharge, 2-inch nominal size, 10-foot length	1
(97403)13225E9136-011	14	Water Hose Assy, Discharge, 1 1/2-inch nominal size, 25-foot length	4
(97403)13225E9136-005	7	Water Hose Assy, Discharge, 2-inch nominal size, 25-foot length	2
(97403)13225E9094-002	8	Distribution Nozzle	4
(97403)1322E9140-000	9	Stand Assy	2
(96906)MS39352-9	13	Adapter, Double Male	1
(96906)MS27030-6**		Gasket, Rubber, Flat (2-inch)	20
(96906)MS27030-5**		Gasket, Rubber, Flat (1 1/2-inch)	4
(97403)13225E9138-000	15	Swivel	4
(96906)MS49000-5	16	Reducer, Male by Female and Female by Male Quick-Disconnect, cam-locking type	4
(97403)13216E7991-000		Towing and Lifting Yoke Assy	1
(97403)13200E6480-000		Drinking Water Storage and Dispensing Bag Assy	1

*Items comprising this assembly were attached at the factory.
**Not illustrated - included in coupling.

Assign two workers to till the FAWPSS which contains 500-gallon drums. There are two methods of filling the 500-gallon collapsible drums. One is filling the drums directly from the PWS/DS; the other is to use the 125-GPM pump that comes with the FAWPSS. The position and the tasks of the crew vary with each of these methods. When drums are filled directly from the water supply point, assign one worker to the control valves of the filling point. Make this worker responsible for controlling the flow of water to the drums. Assign the other worker to the drum. Make this worker responsible for preparing the drum for filling, making all connections, and monitoring the filling operation. When using the 125-GPM pump, you still need two workers for the filling operation. Have one worker operate the 125-GPM pump and control the flow of the water. Assign the other to the drum with the same responsibility as in the method described before. If the drums are to be delivered by helicopter to the supported unit, you will need a vehicle to remove the filled drums to the loading point.

Test each of the four distribution nozzles. If they do not operate at full flow, stop the centrifugal pump engine. Check the strainer inside the nozzle, clean if needed, and replace. Start the centrifugal pump engine, and repeat the procedure described above until all distribution nozzles operate at full flow.

Disassembly of a FAWPSS

Continue issuing water until the drums are empty. Use the following procedures to disassemble the FAWPSS.

Disassemble the FAWPSS in the reverse order. of assembly. Prior to repackaging, drain, dry, and then cap and plug all hose assemblies. Drain, collapse, and fold the water storage and dispensing drum. Store component parts in the original containers in which they were received. Replace dust caps and plugs on each hose prior to repackaging. Disassemble component parts of the various hose assemblies and other fittings in the following order for repackaging:

- Water storage and dispensing bag assembly.
- Distribution nozzle assemblies.
- Tripod stand assemblies.
- Four swivels.
- Four 25-foot discharge water hose assemblies.
- Two reducers.
- Wye-fitting components.
- Female quick-disconnect coupling.
- Male coupling.
- 10-foot discharge water hose assembly.
- 2-inch elbow coupler.
- Two suction water hose assemblies.
- Two water storage and dispensing drum assemblies.
- Towing and lifting yoke assemblies.
- Two valve assemblies.
- Double male adapter.
- Two suction water hose assemblies.
- 125-GPM centrifugal pump.

Section IV

ISSUE AND DISTRIBUTION SCHEDULES AND RELATED FORMS

ISSUE CONSIDERATIONS

Issuing water is perhaps the most important responsibility at the water point. The water point is in the field to provide water to the supported units. In the theater of operations, water is issued as far forward as the tactical situation permits. Usually, the supported units pick up water from the water point in their own containers. There will be a lot of vehicles coming to and going from the water point. Provisions must be made for this traffic. To solve these problems and to equally distribute the water production workload, the water supply supervisor sets up water issue schedules. Schedules eliminate confusion and loss of time that may result if units arrive unscheduled at water points. Such schedules include, but are not limited to, the following:

- Work schedules for assigned personnel so that water points have adequate coverage for each 24 hours of operation.
- Maintenance schedules for equipment so that no more than one water point is down for scheduled maintenance at a time.

- Issue schedules to ensure consuming units receive adequate water supplies without overburdening water point operations or traffic flow.

Work Schedules

The water supply supervisor has the responsibility of preparing and maintaining several different schedules. The most valuable resource at a water point is personnel. In order to use soldiers effectively, you must complete a work schedule. Each water section has enough personnel assigned to operate assigned water points on a continuous basis. Water points must be operational 20 hours per day with 4 hours downtime for scheduled maintenance. The work schedule identifies the NCOIC of each of the two shifts at each water point, as well as all the soldiers assigned as operators on each shift. Establish meal hours (at least three per day) on the schedule, as well as guidelines for breaks. Table 6-3 (page 6-16) is an example of a completed work schedule for one water point.

Maintenance Schedules

Maintenance schedules ensure equipment, the second most important resource, is maintained in operational condition. In order to ensure equipment is properly maintained, each piece of equipment has TMs that identify the maintenance checks and services required on an hourly, daily, weekly, or monthly basis. Using those PMCS and maintenance allocation charts contained in the TMs, schedule necessary maintenance to be accomplished after 20 hours of operation. Take into account the level of maintenance (operator-organizational-DS/GS) and the estimated time required.

If there is more than one water purification unit at a water point, ensure that both are not scheduled for maintenance at the same time. Perform maintenance when all storage tanks are full.

In addition, if possible ensure each water point is scheduled for maintenance at different times during the day so two water points are not down at the same time. Finally, do not schedule water issue during scheduled maintenance periods.

Issue Schedules

The water issue schedule is a written log. Its issuance is coordinated with supporting units to ensure timely and efficient issue of water supplies to supported units in a theater of operations.

The MMC provides location and troop strength of supported units. In certain cases, the MMC may provide allocation instructions limiting issue of water during emergencies. Multiply the troop strength times the applicable consumption factors to determine the estimated consumption rate of each unit. Then compare locations of the supported units with those of the water points. Schedule the units nearest the water points to receive water first. If supported units have no organic transportation or if water is to be issued at a class 1 ration breakdown point not collocated with the water point, establish an issue schedule using the 3,000-gallon SMFT (Figure 6-6, page 6-17).

Draft a DA Form 1714-R which will affect equal issue of water sufficient to meet operational needs to all supported units. Submit the draft issue log to the platoon leader for approval. A sample completed DA Form 1714-R can be found at Figure 6-7 (page 6-18). DA Form 1714-R will be locally reproduced on 8 1/2- by 1 l-inch paper. A copy for reproduction purposes is located at the back of this manual.

Table 6-3. Sample work schedule

WORK SCHEDULE

WATER POINT 1 (SA 13295713) Six personnel

First Shift (0001-1200) meals: 0100/0600/1100

NCOIC - SGT Doe
SP4 Smith
SP4 Brown

Second Shift (1200-0001) meals: 1300/1800/2300

NCOIC - SGT Joe
SP4 Green
SP4 Black

NOTES:

1. Soldiers will receive a 20-minute break for every 4 hours worked.
2. Meals and breaks must be scheduled so that no conflict exists with scheduled maintenance and scheduled distribution.

UNIT	STRENGTH	FACTOR	EST GPD
414 QM Co	156	3.9GPM/D	608 gal
55 MP Co	156	2.9GPM/D	452 gal*
214 Sig Co	200	3.9GPM/D	780 gal
65 Eng Co	275	3.9GPM/D	1,073 gal
515 Inf Bn	572	3.6GPM/D	2,060 gal*
Total daily production requirement			4,973 gal

NOTE: Consumption factors are based on environment and echelon level. Local ration policy, duration of operations, water shortages, and combat situation will decide if the sustaining or minimum rates are to be used.

*These units are engaged in combat; therefore, the minimum resupply rates apply.

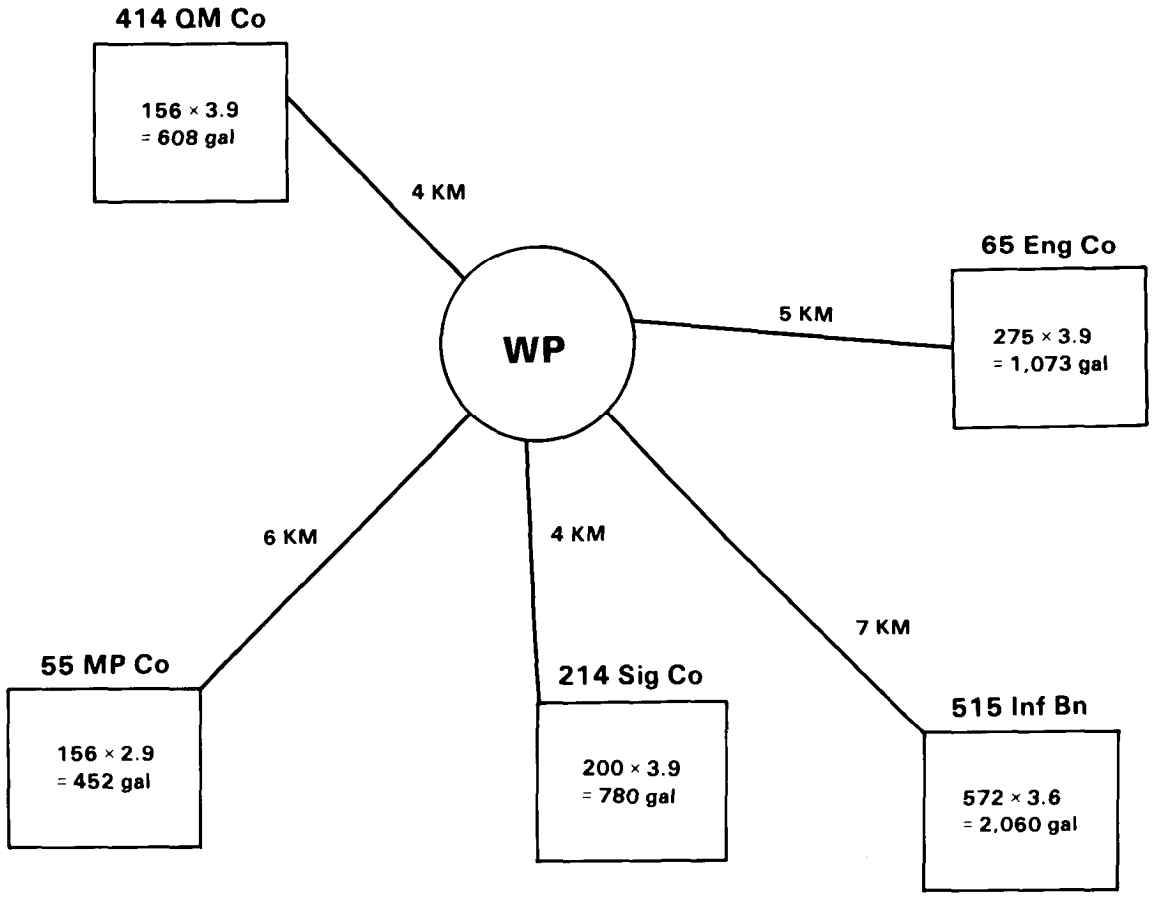

Figure 6-6. Determining unit water issue schedule

DAILY WATER ISSUE LOG

For use of this form, see FM 10-52-1, the proponent agency is TRADOC

WATER POINT NO	NCO IN CHARGE	DATE
1	SGT White	27 Mar 91

TIME	AMOUNT (Gallons)	PICKED UP BY (Using Unit)
0600	400	414 QM Co.
0630	400	55 MP Co.
0700	400	214 MP Co.
1100	400	414 QM Co.
1130	400	55 MP Co.
1200	400	214 MP Co.
1600	400	414 QM Co.
1630	400	55 MP Co.
1700	400	214 MP Co.
	3600 TOTAL	

REMARKS

DA FORM 1714-R, MAY 91 EDITION OF FEB 85 IS OBSOLETE

Figure 6-7. DA Form 1714-R. Daily Water Issue Log

Use the issue log to draft an issue schedule on a memorandum for the commander, indicating the dates and times each supported unit will receive water and which water point they use. Include additional instructions, such as allocation limits and requests for increased supplies, on the memorandum. When signed by the commander, distribute the memorandum to the supported units in advance to ensure sufficient time for planning. Post the completed water issue logs to the water points. Log the actual gallons distributed to the consuming units on subsequent daily logs.

DISTRIBUTION SCHEDULES

Distributing water is another important responsibility you have at the water point. Water provided to the supported units must first be purified or received from another source, such as GS water units. In an arid theater of operations, water is distributed from a water production or storage site to another storage site. Usually, the supporting GS water unit will deliver water from water purification or storage sites by either hose line or SMFTs. Many vehicles will be coming to and going from the water distribution point. Provisions must be made for this traffic. To solve these problems and to equally distribute the water movement work load, the water supply supervisor sets up water distribution schedules. Schedules eliminate confusion and loss of time that may result if dispatch or receipt of water occur at unscheduled times.

The daily water distribution log is important because the information from this form is used by the logistics staff to effectively manage distribution of water to all supported units. For this reason, the data entered on the distribution log should be complete and accurate. A sample DA Form 1714-1-R can be found in Figure 6-8 (page 6-20). DA Form 1714-1-R will be locally reproduced on 8 1/2- by 1 l-inch paper. A copy for reproduction purposes is located at the back of this manual. Follow the guidance below for completing the distribution log.

Water Point No. Each GS water distribution point will have a different number assigned to it. In most GS operations, two or more water units will be operating in different locations throughout the area. It is essential to unit operations to keep separate information on each water distribution point.

NCO in Charge. Enter the name of the NCO in charge of the water distribution point. This information will show who is responsible for the operation of the water distribution point and who to contact for additional information concerning the distribution activities at that distribution point.

Date. At the start of each day, use a new log sheet. This log is a daily report and must be completed for each day the distribution point is in operation and water is distributed. By keeping up with the log on a daily basis, you can determine the amount of water distributed. This information will also be helpful in planning future support needs.

Time. Enter the time that the water was either received or dispatched. Receiving and dispatching water may occur at the same time.

Received. Enter the amount of water and the unit name and number from which it was received. At the end of the day, total this column. This will give the total amount of water received for the day.

Dispatched. Enter the amount of water and the unit name and number to which it was dispatched. At the end of the day, total this column. This will give the total amount of water distributed for the day.

Total Amount on Hand. At the bottom of the form, you will find Total Amount On Hand. Subtract the total of the Dispatched column from the total of the Received column to find the Total Amount On Hand figure.

Remarks. Use the Remarks block for any pertinent information that would have impact on daily operations. If the equipment must operate all day and personnel have little or no time for operator maintenance and are using backup equipment, show this equipment in the Remarks block. Also, state POL consumed, chemicals used, and any other operational information.

Use the distribution log to draft a distribution schedule memorandum for the commander, indicating the dates, times, and amount each supporting unit should dispatch water, and dates, times, and amount of water required at the distribution point. Include additional instructions, such as requests for increased water to meet mission demands (to maintain command storage

levels) or transportation requirements to move water forward to other storage / distribution points. Distribute the memorandum, after signature by the commander, to the supported and supporting units in advance to ensure sufficient time for planning. The completed water distribution logs are sent to the water supervisor for planning data.

DAILY WATER DISTRIBUTION LOG

For use of this form, see FM 10-52-1; the proponent agency is TRADOC

WATER POINT NO	NCO IN CHARGE	DATE
1	SGT Brown	28 Mar 91

TIME	RECEIVED		DISPATCHED	
	AMOUNT	UNIT	AMOUNT	UNIT
0800	60,000 gal	316 WS Co		
1000	5,000 gal	515 MedTrk Co		
1200			40,000 gal	651 WS Co
1400			9,000 gal	10 MedTrk Co
	Total 65,000		Total 49,000	

Total Amount On Hand 316,000 gal

REMARKS

Beginning on hand amount - 300,000 gal.
Closing amount on hand at end of shift - 316,000 gal.

DA FORM 1714-1-R, MAY 91

Figure 6-8. DA Form 1714-1-R.Daily Water Distribution Log

CHAPTER 7

Threat and NBC Operations

Section I

THREAT ON THE BATTLEFIELD

WATER OPERATIONS AND THE THREAT

In World War II, the United States field Army provided potable water to the troops under most battlefield conditions. Generally, this involved clarification and disinfection of fresh water supplies and desalination of seawater supplies. In very few instances was the Army called upon to deal with raw water contaminated with unusual, extremely toxic materials. However, the situation has changed radically. Recognizing that a future war could involve the use of NBC weapons, the contamination of field water supplies with lethal NBC agents must be regarded as a distinct possibility. Water units must be prepared to continue operations in an environment filled with chemical, biological, and radiological hazards. Naturally, these hazards complicate operations far beyond problems posed by the primary effects of NBC weapons. Therefore, it is necessary to defend against NBC attacks. It is also necessary to use NBC defense personnel and equipment to reduce NBC hazards.

The size of the battlefield will strain the resources of water units conducting reconnaissance and decontamination. Over a period of time, numerous areas could be contaminated with NBC agents. Extensive NBC reconnaissance as well as extensive reporting, recording, and dissemination of NBC hazard information will be necessary.

NBC reconnaissance gives units a choice. They can avoid contamination or operate in it. Hasty equipment decontamination limits the spread of contamination and makes future decontamination easier. The capabilities for reconnaissance and decontamination must be maintained.

Base NBC defense plans on enemy capabilities/doctrine and intelligence estimates. The use of persistent nerve agents will be the most immediate concern and will strain reconnaissance and decontamination units the most. If a variety of NBC weapons are employed, forces engaged on the battlefield may become more concerned with survival rather than with continuing operations. Sustained use rather than initial use will present the greatest strain on support supply systems.

Enemy use of NBC weapons places excessive demands on the supply system for water. Water support elements do not maintain contingency stocks of water to accommodate the demands of an NBC environment. Time may not allow for deliberate decontamination operations. Therefore, you may have to operate equipment while it is still contaminated. The combat service support system may be strained to supply sufficient quantities of all critical commodities, including water. Individual and unit endurance will no doubt be keys to successful mission completion.

THE NUCLEAR ENVIRONMENT

With the advance of nuclear technology, a number of potential adversaries are now able to employ

nuclear weapons. The US Army must be prepared to fight and win when nuclear weapons are used. In addition to blast effects, thermal and nuclear radiation pose significant hazards that must be reduced in order to win the AirLand Battle. Equipment will be crushed, dragged, and tumbled by blast. Dirt and dust accompanying the blast wave will obscure optical-sighting devices and unaided vision. The blast effect can also restrict movement by blowing down trees and buildings. Personnel can suffer internal injury from blast overpressure and nuclear radiation. They can suffer external injury from flying debris and burns from thermal radiation. In addition, electromagnetic energy, generated by nuclear weapons, can temporarily black out radio communications and permanently damage electronic equipment.

THREAT NUCLEAR OPERATIONS

During nonnuclear combat, fire plans of threat divisions and high echelons include plans for nuclear strikes. In addition to large caliber artillery weapons capable of firing nuclear ammunition, threat forces stock nuclear warheads for surface-to-surface missiles. They also have frontline air squadrons specifically designated for the ground support role. In nuclear warfare, mass nuclear strikes are carefully planned for breakthrough, deliberate attack, and river-crossing operations. In meeting engagements and exploitations, some nuclear delivery systems are kept in a high state of readiness to fire on targets of opportunity.

THE BIOLOGICAL ENVIRONMENT

Biological weapons are used in military operations to cause disease among soldiers, animals, and plants. Although these agents act on different targets and produce varying effects, the ultimate aim of biological agents is to reduce fighting ability. Potential antipersonnel biological agents are made up of living microorganisms such as fungi, bacteria, rickettsias, and viruses. These biological agents affect the body much like diseases such as typhoid or influenza. But effects may vary from minor incapacitation (common cold) to prolonged illness that results in death (plague). Biological agents can cover an area larger than all other weapons. Large quantities of food, water, equipment, and supplies can be contaminated by a single biological attack.

THREAT BIOLOGICAL OPERATIONS

Threat forces have the technical capability to produce, store, and deliver biological weapons. Threat scientific and technical literature contains many articles that may have originated from either a biological weapons program or a public health project. Threat forces have a vigorous program for investigating BW pathogens and for guarding against them. Such research could quickly lead to the production of BW agents for offensive use. Threat dissemination of biological agents could be accomplished by aircraft spray, aerosol bombs and generators, missiles, infected animals, insect vectors, vials, capsules, or hand dispensers. The selection of a biological agent depends on the target, nature of the operation, climate, and weather. Biological agents may be released in theater reserve forces, marshaling areas, supply depots, water tank farms/hose lines, and deep rear area installations to impede the support of frontline troops.

THE CHEMICAL ENVIRONMENT

Chemical weapons kill or incapacitate personnel. Equipment and facilities are not usually damaged by chemical attack. However, contamination from persistent chemicals ultimately reduces the effectiveness of equipment and facilities because operating personnel must wear protective gear.

In a chemical environment, the standard combat uniform is the chemical overgarment with protective gloves, mask, hood, and overboots. Based on the immediate chemical threat, unit commanders determine what level of MOPP or what degree of chemical readiness to implement. Masks must be worn to protect against nonpersistent agents. Therefore, NBC intelligence is a critical factor in preparing to fight in a chemical environment. Early warning of chemical attacks gives commanders flexibility in determining the MOPP.

Commanders must weigh NBC defensive readiness against their capability to accomplish the mission. Soldiers working and fighting in protective clothing and masks tire quickly. Heat exhaustion casualties increase. More time is required to get the job done if resources remain constant. But, troops in an area contaminated by persistent chemical strikes can continue to work and fight because they are protected from the

lethal or incapacitating effects of chemical agents. Time-consuming decontamination, however, is required before reducing or canceling protective measures.

THREAT CHEMICAL OPERATIONS

Threat forces produce and stockpile lethal persistent and nonpersistent chemical agents to include nerve, blood, and blister agents. Nerve agents are the most serious threat. However, the use of large amounts of blood and blister agents could also change the course of battle.

Chemical weapons are routinely included in threat fire plans. Chemical-capable weapon systems are assigned chemical targets. These systems include mortars, multiple rocket launchers, field artillery cannons and rockets, and aircraft. Nonpersistent agents are normally used against troop concentrations along avenues of approach and against forces in contact with threat units. Persistent agents are normally used to seal the exposed flanks of attacking echelons and to disrupt combat support and service support functions in rear areas.

Employment priorities for chemical agents in both offense and defense are the same as those for nuclear weapons. However, chemicals play a different role than nuclear weapons in that they do not destroy equipment. Threat chemical weapons are primarily used to force the enemy to wear protective gear, restrict the enemy's capability to maneuver and concentrate forces, and contaminate the enemy's combat support and combat service support systems.

Section II

DECONTAMINATION OPERATIONS

NBC DECONTAMINATION OPERATIONS

If NBC weapons are used, many units and large amounts of terrain can become contaminated in a short period of time. Survival in this environment depends on two things. One is quick identification of contaminated areas and units. The other is the ability of the individual soldier to protect himself against NBC contamination until some form of decontamination is possible. Water purification personnel will conduct tests for chemical and radioactive contamination. The frequency of tests is related to the MOPP conditions as shown in Table 7-1 (page 7-4).

When CB warfare is expected, soldiers should wear protective overgarments as their standard combat uniform. Unit leaders determine the appropriate degree of individual protection. Soldiers contaminated by CB agents perform basic skill skin and personal equipment decontamination using individual decontamination kits. NBC decontamination units conduct deliberate equipment decontamination when the tactical situation permits.

Operators decontaminate selected areas of their equipment by spraying with a decontaminant. To do this, they use portable decontamination equipment or field expedients. NBC decontamination units help to conduct hasty decontamination of large items of equipment when the time and situation permit. Deliberate decontamination operations are then easier at a later time.

RADIOLOGICAL CONTAMINATION

Units exposed to initial radiation must first identify the intensity (dose rate) of residual or induced radiation using radiacmeters. Then, they send NBC-4 contamination and radiation dose status reports through command channels. Commanders identify units that exceed the operational exposure guidance. They decide whether to withdraw these units and conduct decontamination operations or to continue with the mission.

Soldiers contaminated by radioactive dust or debris perform basic skill decontamination by brushing, wiping, and shaking their bodies and gear. As the mission permits, they further reduce radiation exposure by occupying armored vehicles, bunkers, or foxholes.

Table 7-1. Test frequency based on MOPP condition

THREAT LEVEL	MOPP	TEST FREQUENCY
No known threat	—	Weekly
Slight threat	1	Daily
Medium threat	2	Twice daily
Severe threat	3	Four times daily
Imminent threat	4	Hourly
Known contamination	—	Hourly and before issue of each batch of water

Highly contaminated vehicles and major weapons systems that pose a hazard are hastily decontaminated. This procedure limits the spread of contamination to other areas and reduces radiation hazards. Early decontamination is necessary to cut down on the cumulative effects of radiation. Without quick decontamination, small but frequent exposure to radiation may significantly reduce combat power when it is needed the most.

TYPES OF DECONTAMINATION

There are three types of decontamination. Basic soldier skill decontamination is done to remove and neutralize chemical contaminants from the body. It must be performed within one minute after contamination in order for the individual to survive. Basic skills decontamination also includes personal wipedown of individual equipment and spraydown of equipment operated by the soldier. Hasty decontamination removes gross amounts of NBC contaminants from combat vehicles and major items of equipment. Contaminated personnel remove chemical and biological contaminants using personal decontamination kits and portable decontamination apparatuses assigned to vehicles. Remove radiological contamination by brushing, sweeping, or shaking away dust and debris. Specialized decontamination units conduct complete decontamination so that troops do not have to wear complete NBC protective equipment. In other words, it reduces the NBC contamination hazard to a level which allows soldiers to operate at a lower MOPP. This, of course, lessens heat stress and equipment operational difficulties caused by the wearing of protective clothing. Since decontamination units do not have enough people and equipment to support all units, help is required from supported units.

DECONTAMINATION EQUIPMENT

Water is the most critical item and the major constraint in accomplishing decontamination operations. Pump units at decontamination sites use large amounts of water. For example, a pump used for equipment decontamination uses about 50 gallons of water per minute. Even the M17 lightweight power-driven decontaminating apparatus uses approximately 23 gallons of water per minute. Decontamination units use truck-mounted, power-driven decontamination apparatuses to conduct equipment decontamination operations. They also use standard water pumps with high-pressure nozzles. Therefore, NBC reconnaissance units try to select decontamination sites near plentiful water sources such as lakes, ponds, streams, and dams. When large amounts of water are not available, decontamination unit leaders use collapsible water storage tanks to set up decontamination points. They resupply these points with SMFTs. Use portable pumps to fill storage tanks and decontamination trucks quickly. In addition, use these pumps to rinse decontaminants from equipment. Potable water is not required for decontamination operations; however, potable water may have to be used if nonpotable water is not readily available, or the nonpotable water is contaminated.

Section III

ENVIRONMENTAL CONSIDERATIONS IN NBC OPERATIONS

ENVIRONMENTAL CONSIDERATIONS

Surroundings that have a major influence on conduct of military operations are—

- Mountains.
- Jungles.
- Deserts.
- Cold weather regions.
- Urbanized areas.
- Nighttime.

Each of these situations has a different influence on NBC reconnaissance and decontamination operations.

MOUNTAIN OPERATIONS

Excluding the extremely high, alpine-type mountains, most mountain systems are characterized by—

- Heavy woods or jungle.
- Compartments and ridge systems.
- Limited routes of communication, usually of poor quality.
- Highly variable weather conditions.

Water elements may operate in direct support of brigade-sized units. Since mountain operations are decentralized, water elements usually operate independently or semi-independently of their parent units. You may need additional water-carrying equipment, such as the FAWPSS, to support these operations.

Chemical and biological decontamination is easier to handle in mountain operations. Changing weather conditions and constant winds promote natural decontamination at a much faster rate than in flat or rolling terrain. Nonpersistent chemical agents concentrate on low terrain, and radiation concentrates on prominent terrain features where radiological hotspots are produced by fallout.

JUNGLE OPERATIONS

The jungles of Asia, Africa, and the western hemisphere are potential battlefields. Jungle terrain is characterized by—

- Heavy vegetation, varying from rain forest to savanna.
- Constant high temperatures.
- Heavy rainfall during certain seasons.
- Constant high humidity.

As in mountain operations, decentralize jungle operations as much as possible. Place water elements in direct support of battalion task forces. Requirements for water increase in a jungle environment. Soldiers are unable to wear protective clothing for long periods of time. Heat stress is a major factor. Therefore, many MOPP levels and associated equipment decontamination operations are necessary to reduce heat load and to operate equipment without sustaining NBC casualties. Schedule reduction in MOPP at brief intervals since chemical agents are more persistent and effective in jungle conditions.

Because of these things, it is extremely difficult to maintain water operations. Solid decontaminants, such as STB, tend to cake and decompose at a faster rate than in temperate climates. Although caking of the decontaminant does not affect the usefulness of the compound, decomposition eventually makes it ineffective. Operation of water purification equipment requiring full NBC protection may call for relatively short periods of operation, followed by relatively long periods of rest due to heat. Relocation of a water element may require support of a small security force to assist in the event of ambush. Water points are lucrative targets under normal conditions, but water points operating in jungle combat are even more vulnerable to enemy attacks.

DESERT OPERATIONS

Deserts are semiarid and arid regions containing a variety of soils in varying relief. Desert regions are characterized by—

- Extreme temperature ranges, varying between 30°F and 130°F over a 24-hour period.
- Changing visibility conditions.
- Long periods of drought, interrupted by sudden rains that bring flash floods.
- Shortages of suitable ground water.

- Large areas for excellent movement, interspersed by ravines, bogs, and sand seas.
- An absence of pronounced terrain features.

The principal problem facing water units in desert operations is lack of water. Although water units normally operate as far forward as possible, available water supplies may force water support units to operate further to the rear than normal.

Camouflage is another problem in desert operations. Lack of vegetation requires extensive use of camouflage nets, patterns, and mud paintings and covering of reflective surfaces to conceal the water support operations.

Heat stress is also a critical problem for soldiers working in desert environments under complete NBC protection. Operation of water points in daytime temperatures means short periods of work followed by long periods of rest. Operations at night, to avoid heat stress, create light discipline problems which may be unacceptable, considering how easy it is to see in desert regions. To conserve water in desert combat, place greater reliance on decontamination using DS2 rather than STB slurry. Therefore, increase your resupply rates.

COLD WEATHER OPERATIONS

Northern regions, including the Arctic and subarctic, comprise about 45 percent of the North American continent and 65 percent of the Eurasian land mass. Northern regions are characterized by—

- Extreme cold and deep snow during winter months.
- Spring breakup, resulting in poor movement.
- Whiteout and grayout which cause loss of depth perception, making flying, driving, and skiing hazardous.
- Ice fog in which clouds of ice crystals cover troops, vehicles, bivouac areas, and permanent facilities, marking their location.

When temperatures go below 32°F, water equipment is difficult to operate and maintain. Constant winterizing and use of heaters are required to prevent freezing. Pump ground water in winter from beneath an ice layer. To prevent freezing, it maybe necessary to preheat the water during loading and keep it heated until it is used. In addition, purification/disinfection chemicals will not be as effective when the temperature drops below 32°F. At this point, chlorine takes much longer to be effective. Toxic chemicals also react differently at extremely low temperatures. Nonpersistent agents become persistent and persistent agents become more persistent.

Munitions containing normally persistent agents become very persistent at low temperatures. If a soldier gets a solid agent on his clothing, he will probably not detect it since it has no effect in solid form, However, if the temperature warms or if a contaminated soldier enters a heated area, the agent becomes dangerous. Because of this, it may be necessary to set up a station to warm soldiers sufficiently to detect the presence of a solid agent. Isolate the solid agent before the soldier reaches the area where he unmasks or where others are unmasking. You will need additional soldiers and equipment for this step. In cold weather operations, give decontamination and detection efforts priority to heated support facilities.

All water analysis is affected adversely by extreme cold. Electronic instruments, such as radiacmeter and automatic chemical agent alarms, become less dependable and may even fail. Chemical detection and identification kits cannot detect solid agents. It may be necessary to take soil, snow, or vegetation samples from suspicious areas and warm them to detect and identify chemical vapors.

URBANIZED AREA OPERATIONS

Urbanized areas will have a significant effect on military operations in the future. Today, it is difficult to avoid built-up areas, particularly in Western Europe. Urbanized terrain is characterized by—

- Villages (population of 1,000 or less).
- Towns and small cities which are not part of a large urban complex (population in excess of 1,000 but less than 100,000).
- Strip areas which connect villages and towns along roads and valleys.
- Large cities with associated urban sprawl (population in excess of 100,000 and covering 100 or more square miles).

Water support operations are easy to support in urbanized terrain. Water sources for decontamination operations are virtually assured in built-up areas. Simplify security by limiting observation and improving fields of fire. However, water elements do face one potential problem. Chemical agents tend to act differently in built-up

areas. Low-lying areas tend to collect residual chemical contamination. Some nonpersistent agents become relatively persistent when they enter buildings or rubble. Water units must pay particular attention to avoid contaminated areas and mark them whenever possible. When buildings are contaminated with persistent chemical agents, their value for cover, concealment, and shelter is reduced. Wood and concrete tend to absorb liquid agents and may give off toxic vapors for days or weeks. Chemical decontamination of a building requires large quantities of decontaminants and considerable effort. Reduce building contamination by covering contaminated areas with plastic sheets, STB slurry, sodium silicate (water glass), or some substance that covers or absorbs the agent. Streets and sidewalks also absorb liquid agents, then give off toxic vapors when heated by the sun. It may be necessary to decontaminate such surfaces several times to reduce toxic hazards to soldiers occupying the area.

Biological agents may remain viable for long periods in built-up areas. Soldiers should not occupy structures that are contaminated with biological agents. Decontamination of biologically contaminated structures is beyond the ability of water units. If it is necessary to occupy a biologically contaminated area, burn the buildings and their contents. Soldiers should remain upwind of the fire. Otherwise they should remain masked.

Section IV

NBC AND FIELD WATER SUPPLY

NBC THREAT

Contamination of field water supplies with lethal NBC agents must be regarded as a distinct possibility. In order to decontaminate such water properly, it is essential to fully examine the nature of the NBC contamination threat.

NUCLEAR CONTAMINANTS

When a nuclear weapon detonates, several devastating events take place: formation of fission products, production of radiation, generation of EMP, development of neutron particles, creation of thermal radiation, and blast. These events usually take place successively over a very short period of time. Although all of these phenomena pose a threat to a quartermaster water supply point, this manual will discuss contamination resulting from a nuclear blast.

Nuclear Contamination of Water

This takes place primarily as a result of fallout. Fission product contamination from overland explosions generally occurs as downwind fallout. The particle size is in the range 1 micron to 7 millimeters. The fallout is usually insoluble in water. The little that dissolves is usually quickly absorbed on clay or other suspended material in the water. A possible exception to the insolubility of land fallout might be that resulting from a nuclear detonation over a salt dome. The fallout could be soluble salt particles rather than insoluble silicates. Another exception to the fallout insolubility rule could be the fallout resulting from the detonation of a nuclear weapon over, on, or submerged in a large body of water.

MPC in Water

All available evidence indicates that ingestion of any quantity of radioactive material is harmful. However, complete abstinence is not possible since small amounts of radioactivity exist everywhere. The short- and long-term MPCs are designed to control the amount of radioactive substances taken into the body by drinking water.

During normal peacetime conditions, the US Army abides by peacetime nuclear standards established by the EPA. The Army in the field is subject to the MPCs established in TB MED 577 (Table 7-2, page 7-8). The decontamination factor of the ROWPU is 99 percent.

In regard to fission products, fresh fission products are much less hazardous than old fission products (curie for curie). Taking this into consideration, it is apparent that the MPC for fission products should be a function of time. Older fission products have a lower MPC. A logical

approach to this situation is the establishment of a curve in which the MPC decreases at the same rate as the fission products. This has been done in Figure 7-1 (page 7-9), where two curves are shown. One curve is for the consumption of 5 liters of water per day. The other is for the consumption of 20 liters of water per day (as in hot, arid regions).

Table 7-2. Short- and long-term standards

SHORT-TERM CONSUMPTION STANDARDS (UP TO 7 DAYS)		
CONSTITUENT	**5 LITERS/DAY**	**15 LITERS/DAY**
Color	50 CU	50 CU
Odor	3 TON	3 TON
pH	5 to 9	5 to 9
Temperature	39° to 95°F	39° to 95°F
TDS	1,000 mg/l	1,000 mg/l
Turbidity	1 NTU	1 NTU
Arsenic	0.3 mg/l	0.1 mg/l
Cyanide	6.0 mg/l	2.0 mg/l
Chloride	600 mg/l	600 mg/l
Magnesium	100 mg/l	30 mg/l
Sulfate	300 mg/l	100 mg/l
Coliform	1 per 100 ml	1 per 100 ml
Hydrogen Cyanide	6.0 mg/l	2.0 mg/l
Lewisite	0.3 mg/l	0.1 mg/l
Nerve Agents	0.02 mg/l	0.004 mg/l
Radiological	8.0 microcuries/l	3.0 uCi/l
LONG-TERM CONSUMPTION STANDARDS (UP TO ONE YEAR)		
CONSTITUENT	**5 LITERS/DAY**	**15 LITERS/DAY**
Color	50 CU	50 CU
Odor	3 TON	3 TON
pH	5 to 9	5 to 9
Temperature	59° to 72°F	59° to 72°F
TDS	1,000 mg/l	1,000 mg/l
Turbidity	1 NTU	1 NTU
Arsenic	0.06 mg/l	0.02 mg/l
Cyanide	6.0 mg/l	2.0 mg/l
Chloride	600 mg/l	600 mg/l
Magnesium	100 mg/l	30 mg/l
Sulfate	300 mg/l	100 mg/l
Coliform	1 per 100 ml	1 per 100 ml
Hydrogen Cyanide	NA	NA
Lewisite	NA	NA
Nerve Agents	NA	NA
Radiological	8.0 microcuries/l	0.05 uCi/l

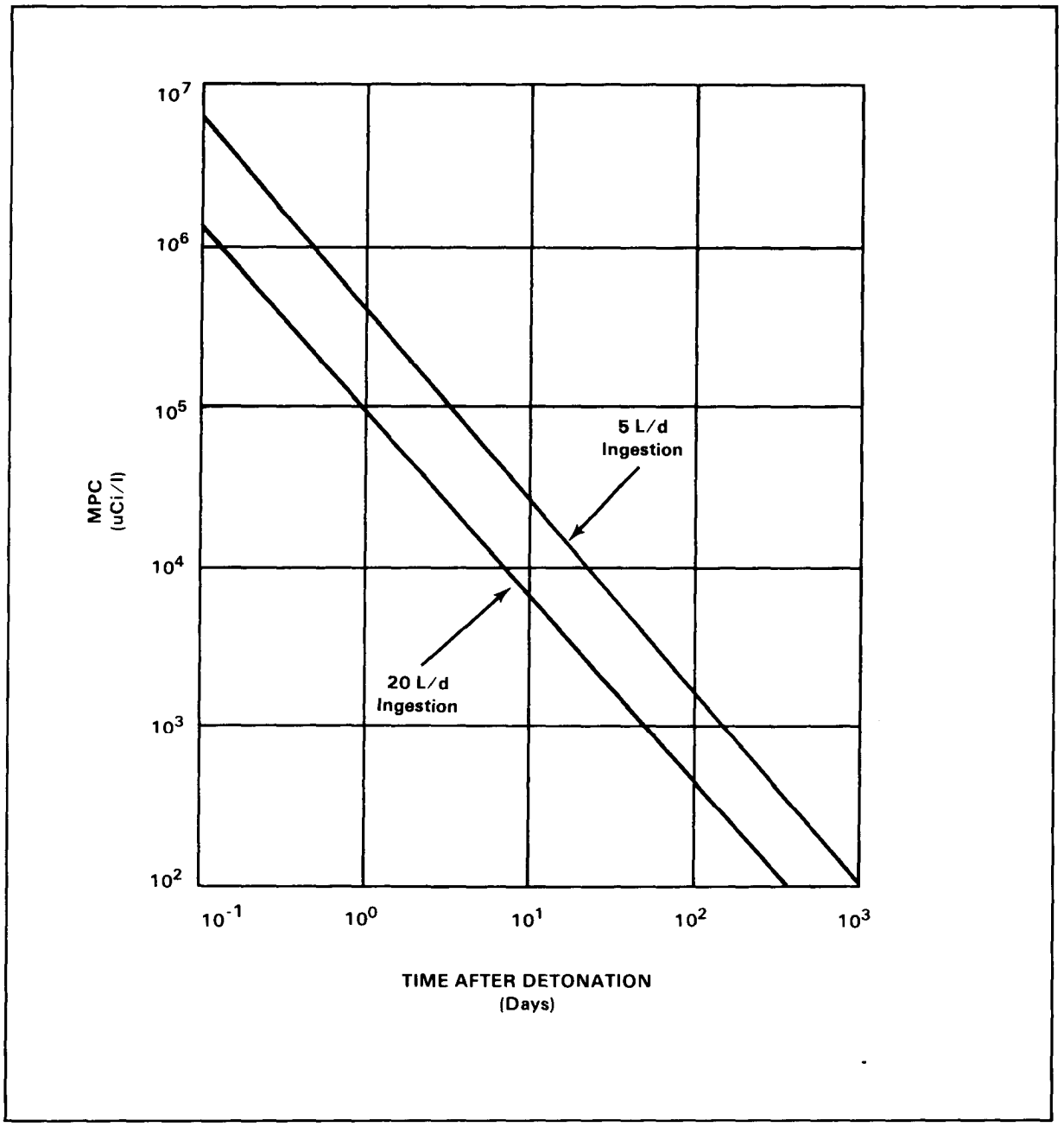

Figure 7-1. MPC of fission products in water as a function of time

Detection of Nuclear Contamination

In order to enforce the MPCs of TB MED 577, the field Army must be able to determine the concentration of radioactive material in water. The radiation meter used for this purpose would also be available for other essential purposes such as measuring the level of area contamination and checking for hot spots in the water purification equipment (such as the multimedia filter and the cartridge filter of the ROWPU units). Both these functions would be necessary to lower radiation exposure to the operators.

The radiation meter of choice, the AN/PDR-27 Radiacmeter, is a portable, watertight, partially transistorized instrument designed for field use (Figure 7-2, page 7-10).

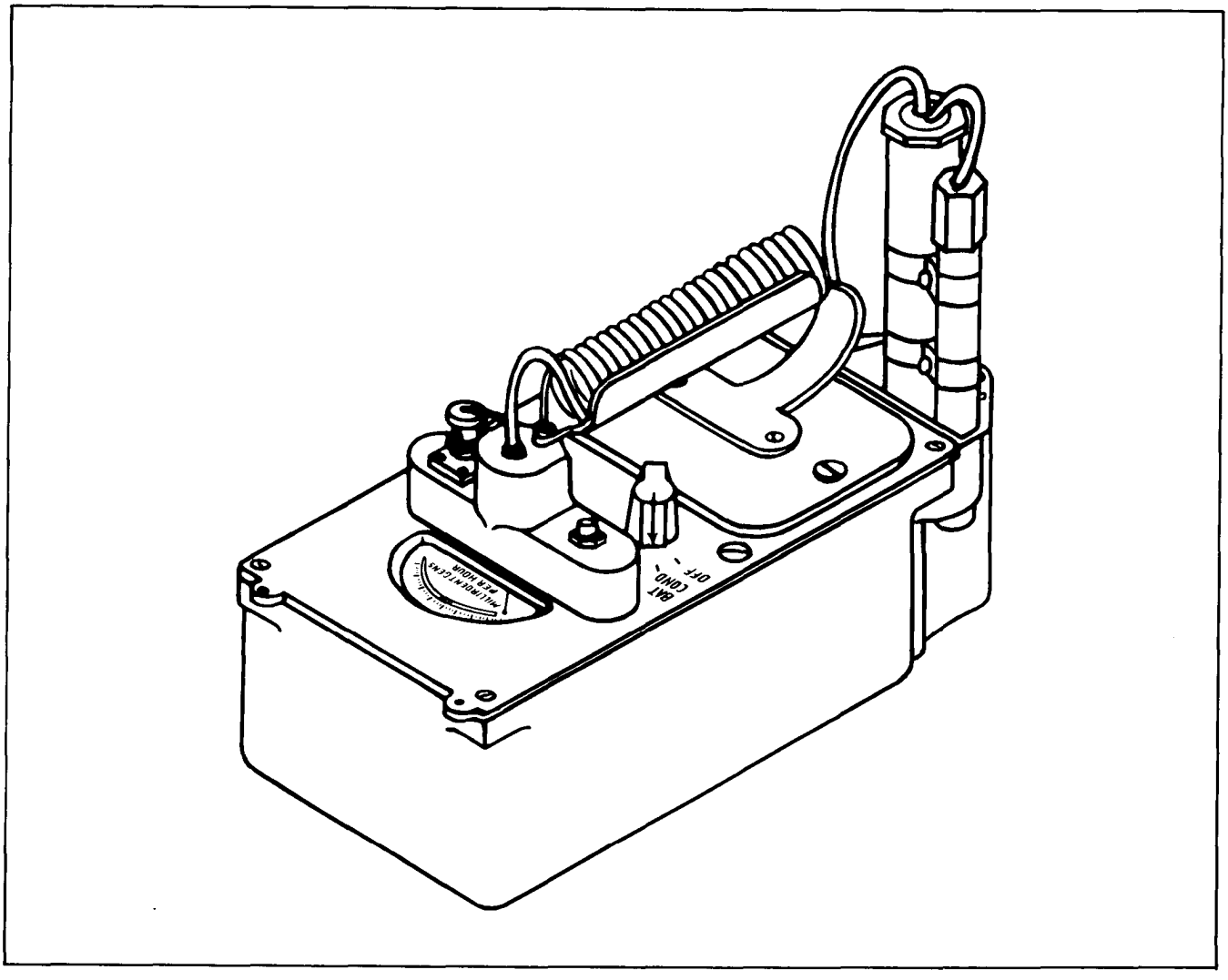

Figure 7-2. AN/PDR-27 Radiacmeter

The AN/PDR-27 has four ranges of sensitivity: 0 to 500 mr/h, 0 to 50 mr/h, 0 to 5 mr/h, and 0 to 0.5 mr/h. You can select any of the four ranges by a switch on the AN/PDR-27 panel. The two higher (less sensitive) ranges use the smaller of the two G-M probes. The two lower (more sensitive) ranges use the larger probe. Both probes measure gamma rays. When the beta shield is opened or removed from the larger probe, you can detect beta rays.

In order to monitor water, the detector probe of the AN/PDR-27 is protected with a rubber sheath and inserted into the water under test. The meter reading, in mr/h, is proportional to the concentration of mixed fission products in water in microcuries per liter. The water source, being present in bulk, shields outmost of the extraneous radiation, if any were present. However, in an area of very high background radiation, this method would have limitations. The exact procedure is as follows:

- Remove the beta shield from the large (sensitive) detector probe, and then cover the entire probe with a thin rubber sheath to protect it from the water.
- Turn the range switch to the battery condition position. The meter should read to the right of the halfway mark. If not, replace the batteries,
- Turn the range switch to the 0 to 5 mr/h range.
- Insert the protected probe into the water to be measured.
- Read the AN/PDR-27 meter scale in mr/h.
- Refer to conversion chart (Figure 7-3, page 7-11) to convert from mr/h to uCi/l.

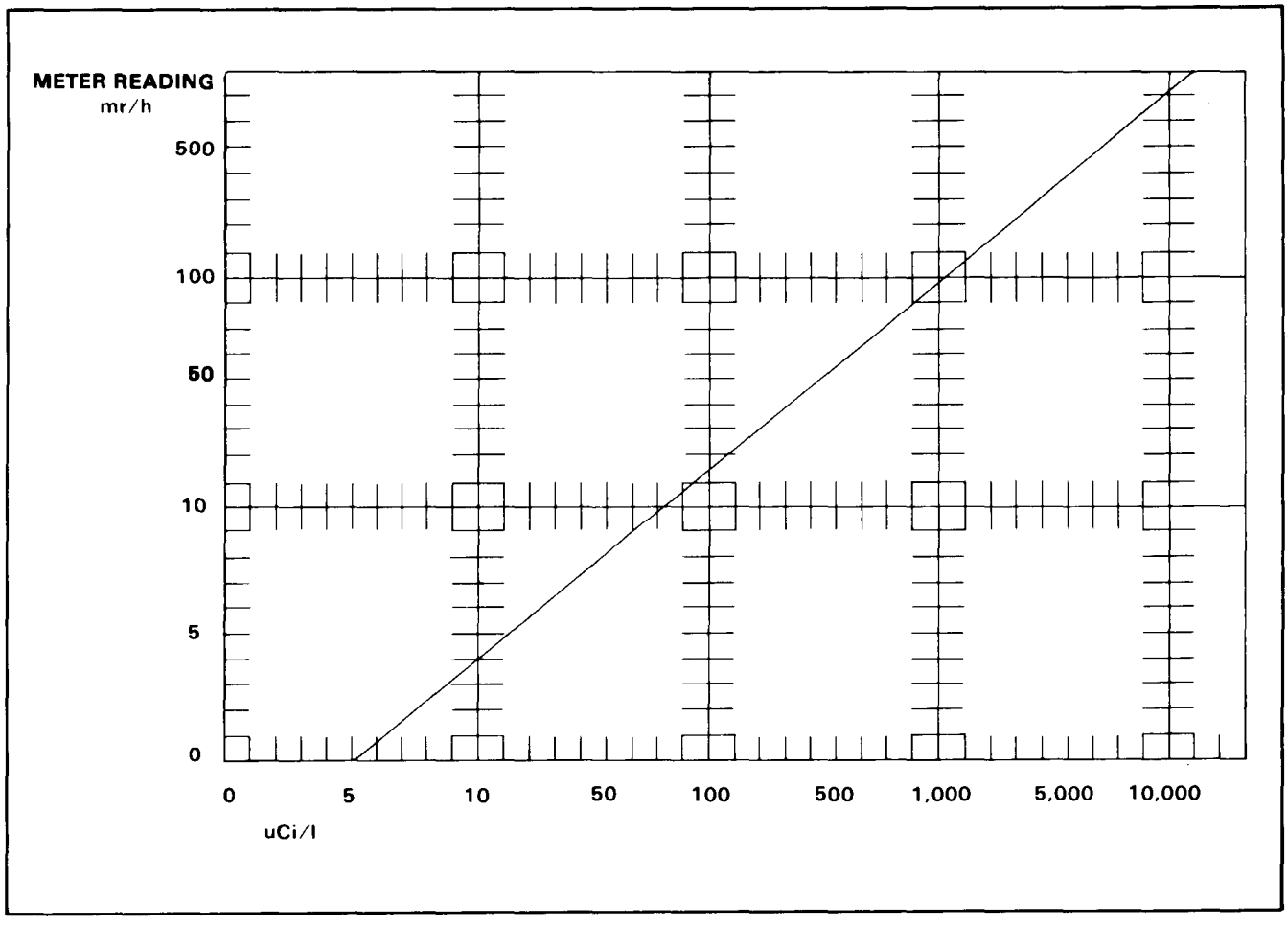

Figure 7-3. Conversion chart from mr/h to pCi/l

TB MED 577

This bulletin states that "water is suitable for drinking if personnel can occupy the area around the water source for a week or less." This concept has several operational problems for the water treatment specialist. It is entirely possible to have heavy radiological contamination upstream, resulting in a contaminated river flowing through a relatively uncontaminated area. Water source standards are given in TB MED 577. New drinking water standards have been established jointly by the Army Surgeon General and the Quartermaster Corps. Source water standards for the ROWPU are greater than 100,000 pCi/l. Drinking water standards are established for short- and long-term at 5 and 15 liters consumption per day. Since the ROWPU removes 99 percent of all NBC contamination, the source water standard results in product water having a residual nuclear contamination level of greater than 1,000 pCi/l, much less than the short- or long-term standard for drinking water. However, testing of product water is still required to assure proper operation of purification equipment.

Supply Side Nuclear Water Monitoring

In attempting to implement the short- and long-term drinking water standard, it is apparent that product water cannot be checked accurately with the usual AN/PDR-27 nuclear water monitoring procedure. The reason is that the AN/PDR-27 is designed to read radiation in milliroentgens per hour and is not sensitive to the much lower readings required for product water (microcuries). In response to the problem, an alternative procedure is suggested. Work backwards from the product water. Establish how high a mixed fission product concentration in the raw water the

ROWPU can effectively remove and then monitor for that level in the raw water. This procedure is known as supply side nuclear water monitoring. The advantage of this method is that the much higher concentration of radiation in the raw water is measurable by means of the AN/PDR-27 using the supply side nuclear water monitoring procedure. However, for this method to be feasible, the decontamination capability of the water purification unit must be known.

AN/PDR-27 Nuclear Water Monitoring Procedure

This monitoring procedure is sensitive enough to check the concentration of contamination in the raw water. Since we know the ROWPU is capable of removing 99 percent of the nuclear contamination, we can use the supply side monitoring procedure to determine whether decontamination is effective. For example, to meet the short-term standard of 3 uCi/l at 15 L/d consumption, the raw water can be checked to see whether the level is below 300 microcuries per liter, anticipating that 99 percent of the nuclear contamination will be removed by the RO and monobed ion exchange step, thus bringing the nuclear contamination in the product water to or below the 3 uCi/l standard. Therefore, if the raw water has above 300 uCi/l (or 30 mr/h) nuclear contamination, it cannot be adequately purified by the ROWPU to the safe drinking water standard.

BIOLOGICAL CONTAMINANTS

Biological operations is the employment of biological agents to produce casualties in man or animals and damage to plants or materiel or defense against such employment. The US policy on biological agents (including toxins) is stated in FM 3-100. In summary, the United States: "*(1)* renounces the use of all methods of biological warfare and *(2)* confines military programs for biological research to defensive measures, such as immunization, prophylaxis, therapy, and sanitation." Although the true potential of BW is untested, the devastating effects of naturally occurring diseases are well known. It is a historical fact that, in most wars, more soldiers have lost their lives due to germ-related diseases than to direct enemy action. Figure 7-4 (page 7-13) presents the percent of hospital admissions due to disease in three wars (World War II, Korean War, and Vietnam) in which the United States participated. BW agents are classified into three general groups:

- Antipersonnel.
- Antianimal.
- Anticrop.

The antipersonnel group is further classified into:

- Bacteria.
- Fungi.
- Protozoa.
- Rickettsiae.
- Viruses.

Microorganisms

The microorganisms represented by the above group are responsible for over 160 cataloged diseases. See examples in Table 7-3 (page 7-14).

Any pathogenic microorganism can be used as a BW agent. However, practical considerations such as ease of production, shelf life, infective dose, and incubation period restrict the list.

US Army Quartermaster Corps water purification equipment is designed to remove, inactivate, or destroy microorganisms in water. In general, this equipment is geared to handle water contaminated with biological agents. However, difficulty could arise in destroying microorganisms resistant to chlorine and other disinfectants and removed in part only by mechanical methods such as coagulation or filtration. These microorganisms are classified as microbiological spores, encapsulated cells, chlorine-resistant viruses, microorganisms protected by fecal matter or culture medium, deliberately bred chlorine-resistant microorganisms, microencapsulated cells, and new germs generated by bioengineering,

Toxins

Another important group of materials classified as BW agents is the toxins. Toxins are poisonous metabolizes secreted by certain bacteria and fungi. Some prominent bacterial toxins are:

- Clostridium Botulinum Toxin.
- Diphtheria Toxin.
- Gonyaulax Catenella Toxin.
- Staphylococcus Enterotoxin.
- Tetanus Toxin.

Mycotoxins

Mycotoxins are derived from fungi. Mycotoxins (and other metabolizes) are secreted by the various

species and varieties of fungi. Mycotoxins are classified into nine main classes:

- Aflatoxins.
- Citrinins.
- Cytochalasins.
- Ochratoxins.
- Patulins.
- Sterigmatocystins.
- Tremorgens.
- Trichothecenes.
- Zearalenones.

The trichothecenes are one of the principal classes of mycotoxins. They are chemically stable and resistant to oxidants including chlorine.

Although the symptoms of mycotoxicosis vary somewhat depending upon the exact mycotoxin involved, the standard pattern for both man and animal is shown below:

- Gastrointestinal disturbances involve vomiting, diarrhea, and hemorrhage in mucosal epithelia or stomach and intestine.
- Circulatory problems involve excessively rapid heart beat, decrease of circulating white blood cells and platelets, and meningeal hemorrhage in the brain.
- Skin tissue involves hemorrhage, edema, and necrosis.
- Various nervous system dysfunctions result.
- Death occurs.

Mycotoxins can pose a threat to man as inhaled dust, a food contaminant, or even a vesicant to the skin. In addition, mycotoxins could pose a serious contamination threat to water supplies. Man's exact toxic limits of ingested contaminated water are unknown. This is due, in part, to the difficulty of conducting accurate quantitative analyses.

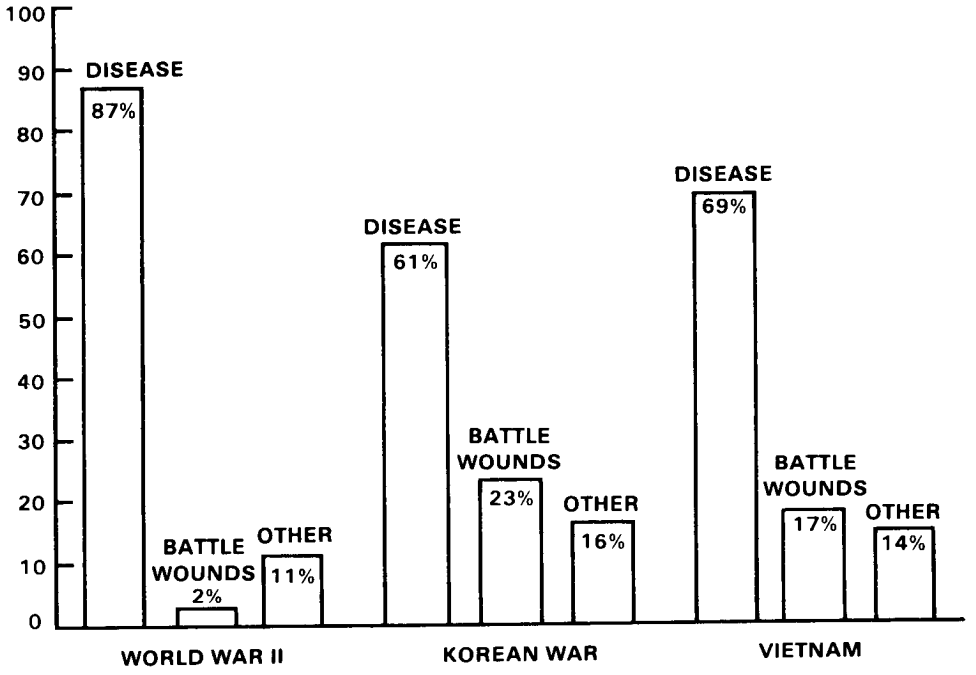

Figure 7-4. Percent of hospital admissions due to disease and battle wounds in three wars

Table 7-3. Sample microorganism diseases

BACTERIAL DISEASES	FUNGAL DISEASES	PROTOZOAL DISEASES	RICKETTSIAL DISEASES	VIRAL DISEASES
Anthrax	Actinomycosis	Amoebiasis	Q Fever	Chicken Pox
Brucellosis	Blastomycosis	Malaria	Rickettsialpox	Dengue Fever
Cholera	Coccidioidomycosis	Toxoplasmosis	Rocky Mountain Spotted Fever	Encephalitis
Diphtheria	Histoplasmosis			Hepatitis
Glanders	Nocardiosis			Herpes
Leprosy				Influenza
Plague				Measles
Tetanus				Mumps
Tuberculosis				Poliomyelitis
Tularemia				Psittascosis
Typhoid Fever				Smallpox
				Rabies
				Yellow Fever

Regarding the contamination threat, there is also the matter of water volubility having a direct bearing on water containability and decontaminability. Remove insoluble mycotoxins by a simple clarification step. Soluble mycotoxins could require that the water be desalinated or perhaps subjected to some adsorption process. The water volubility of mycotoxins can vary widely. For instance, Nivalenol is soluble in water, T-2 is relatively insoluble in water, and Zearalenone is insoluble in water. The following statements summarize mycotoxins:

- Mycotoxins are poisonous fungal metabolizes.
- A given fungus can produce more than one mycotoxin.
- A given mycotoxin can be produced by more than one fungus.
- Mycotoxins run the gamut of water volubility: from highly soluble to insoluble.
- Mycotoxins are generally stable chemically and are resistant to oxidants including chlorine.
- The analytical determination of mycotoxins is difficult and requires sophisticated equipment and complex procedures.
- The trichothecenes comprise the most important single group of mycotoxins.
- Mycotoxins must be regarded as potent BW agents.
- Mycotoxins are easily produced. All you need is a grain substrate, a fungal inoculum, moisture, and heat.
- Very little is known of the capability of Army field water purification equipment for decontaminating water containing mycotoxins.

MPC

The establishment of MPCs for biological agents in water is not feasible because the spectrum of possible agents in water, each with its own MPC, is far too broad. The susceptibility of human beings to infection by any given agent varies widely, depending upon many factors such as general health, antibody strength, previous immunological experience; and, the microorganisms themselves vary widely in virulence. In some instances, it is entirely conceivable that a single microorganism ingested into the body in drinking water could result in the soldier acquiring the disease. In other instances, massive doses could cause infection. The concept of MPC is too uncertain, therefore, to have significance as far as the contamination of drinking water with BW agents is concerned.

Detection in Water

BW agent contamination causes very little change in the chemical and physical characteristics of the water, such as pH, alkalinity, and color. This makes it difficult to devise an indicator test which might indicate the presence of microorganisms. An excessive chlorine demand to the water, however, should be viewed with concern. The excessive demand could be due to microorganisms or to the culture medium in which they were propagated and produced.

Every effort is being made to develop a quick, simple, and reasonably accurate method of detecting pathogenic microorganisms in water in the field. However, until a practicable BW water detection kit is developed, the Army must rely on one or more of the following suspicious signs or circumstances:

- Enemy aircraft dropping unidentified material or spraying unidentified substances.
- New and unusual types of bombs, particularly those which burst with little or no blast.
- Smoke and mists of unknown source or nature.
- Unusual or unexplained increase in the number of insects, such as mosquitoes, ticks, or fleas.
- Any weapon not seeming to have any immediate casualty effect.
- An increased occurrence of sick or dead animals such as dogs, livestock, or birds.
- An increased incidence of sickness and disease among troops.
- Intelligence reports indicating the possible use of BW by the enemy.

It is logical to assume that the potential enemies of the United States can produce various effective BW agents and deliver them by overt and covert means. BW agents contaminating field water supplies could produce illness or death among soldiers, impair morale, and reduce the will to resist. Soldiers and civilians have no resistance to germs used for BW purposes. It is conceivable that, in some instances, a single microorganism could initiate disease. Many microorganisms are characterized by a remarkable capability of survival. BW agents do not multiply significantly when present in water due to the lack of proper nutrients and conditions for growth. As a result of deliberate and unusual means of delivery, water supplies could become contaminated with germs that are not normally waterborne. Current routine bacteriological water quality examination tests are not useful in detecting the presence of BW material. Standard Army ROWPUs can be depended upon to decontaminate water containing BW agents. Raw water containing a chlorine-resistant BW agent might require the use of the C W/B W pretreatment set. Although specific wells are vulnerable to local BW contamination, ground water aquifers are assumed to be free of BW agent contamination and should be used whenever the tactical situation permits.

CHEMICAL CONTAMINANTS

Chemical agents can be delivered on target by a wide variety of systems. Consequently, CW agents are usable in a diversity of military situations. Chemical agents are of a search-and-destroy nature. They can harm an enemy if he is widely dispersed in the open or in fortified positions. Chemical agents are antipersonnel in makeup. They do not destroy buildings, emplacements, power plants, communication installations, or vehicles. These facilities can be used later by friendly forces. Chemical agents have an excellent capability of area denial. Chemical agents are effective for both overt and covert operations. They can travel around corners, diffuse through woods, and seep into dugouts and fortifications. They offer a spectrum of physiological effects from mild, temporary narcosis to severe bodily damage and death. They are colorless, odorless, and tasteless. The first indication of their use could be the appearance of casualties among military personnel. They affect people, animals, and plants but leave homes, factories, and other installations untouched. Most CW agents are relatively easy to produce in large quantities at moderate cost. Chemical agents are classified into seven major categories:

- Nerve.
- Blister.
- Blood.
- Choking.
- Vomiting.
- Irritant.
- Incapacitating.

Toxins are not included in the above list because they are usually produced by living microorganisms and are classified as BW agents by our armed forces. All agents referred to in this section are US agents. These agents are similar to, and in many cases identical to, foreign agents.

Nerve Agents

When you consider threats to water supplies, the nerve agents tower above all others. Nerve agents function by inhibiting cholinesterase, a body enzyme. With cholinesterase unavailable, the acetylcholine essential to the functioning of the nervous system cannot be neutralized; and the body is stimulated to death. The physiological symptoms of nerve agents on the human body are:

- Unexplained runny nose.
- Tightness in chest.
- Dimness of vision due to pinpointing of pupils.
- Pain in eyes.
- Difficulty in breathing.
- Drooling,
- Excessive sweating.
- Nausea, vomiting, abdominal pains, and involuntary urination or defecation.
- Twitching, jerking, and staggering.
- Headache, confusion, drowsiness, and convulsions.
- Coma and death.

Nerve agents are usually used as is. However, if desired, they can be thickened with a thickening agent such as methyl methacrylate. Also, be aware of the binary agent. According to the binary agent concept, a nerve agent is formed in flight in the shell or bomb on its way to the target. Two relatively harmless reactants are kept in storage on the ground and not added to the two compartments of the weapon until ready for use. Mixing of the two reactants is achieved in flight by means of compressed air, a mechanical mixer, or, in the case of the shell, by the inherent acceleration and spin.

In regard to the water contamination threat of binary agents, the primary concern is the agent itself. However, there is also the matter of incompletely used reactants, catalysts, and by-products.

INCAPACITATING AGENTS

Incapacitating agents also pose a threat to water supplies. Agent BZ, a hallucinogen, has received attention in the past as a threat to water supplies. Incapacitating agents fall into seven general groups (based on their effects) as follows:

- Hallucinogens cause visions and illusions. Examples are marijuana, magic mushrooms, psilocybin, peyote, mescaline, belladonna, thron apple, henbane, scopolamine, and LSD.
- Euphoriants cause an extreme state of well-being.
- Depressants cause an extreme state of morbid gloom.
- Cataplexogenics result in the subject thinking clearly but unable to translate thought into action.
- Disinhibitors result in the subject over-reacting to stimuli (for example, excessive talking or laughing). The most common example is ethyl alcohol.
- Chronoleptogenics distort the sense of when events occur.
- Confusants result in the victim being completely baffled, uncertain, and perplexed in whatever situation he finds himself.

Other Threat Agents

Other possible threat agents to water supplies, but of much less importance than nerve agents, include:

- Arryl carbamates.
- Nitrogen mustards (HN).
- Lewisits (L).
- Blood agents, including hydrogen cyanide (AC) and cyanogen chloride (CK).
- Arsenical, including ethyldichlorarsine (ED) and phenyldichlorarsine (PD).

Notice that HD is not on the list. Although HD is a very important area contaminant, it is not regarded as a water contaminant because of its density (heavier than water) and water insolubility.

MPC in Water

MPCs for CW agents in water are given in TB MED 577. Two sets of figures are given: one for short-term consumption (seven consecutive days or less) and one for long-term consumption (more than seven days). The figures are shown in Tables 2 and 3, Appendix C, FM 10-52. These short- and long-term standards have been updated. They can be found in Table 7-2 (page 7-8).

Detection in Water

Detection of chemical agents in water is a major consideration. It is important to monitor the raw water to determine whether the chemical agent concentration is below the MPC and the water is thus suitable for use or whether the concentration is above MPC and the water must be subjected to decontamination. It is also important to know whether the treated water has been made safe to drink after decontamination.

Determine the presence of CW agents in water by the use of the M272 Detector Kit (Figure 7-5, page 7-17). In addition, the following information might be indicative of CW contamination in the water:

- Dead fish or other aquatic life including vegetation.
- Unusual odor to the water, perhaps the characteristic of certain CW agents.
- An unusually high chlorine demand to the water.
- Intelligence information indicating that a general CW attack or direct sabotage of the water supply took place.

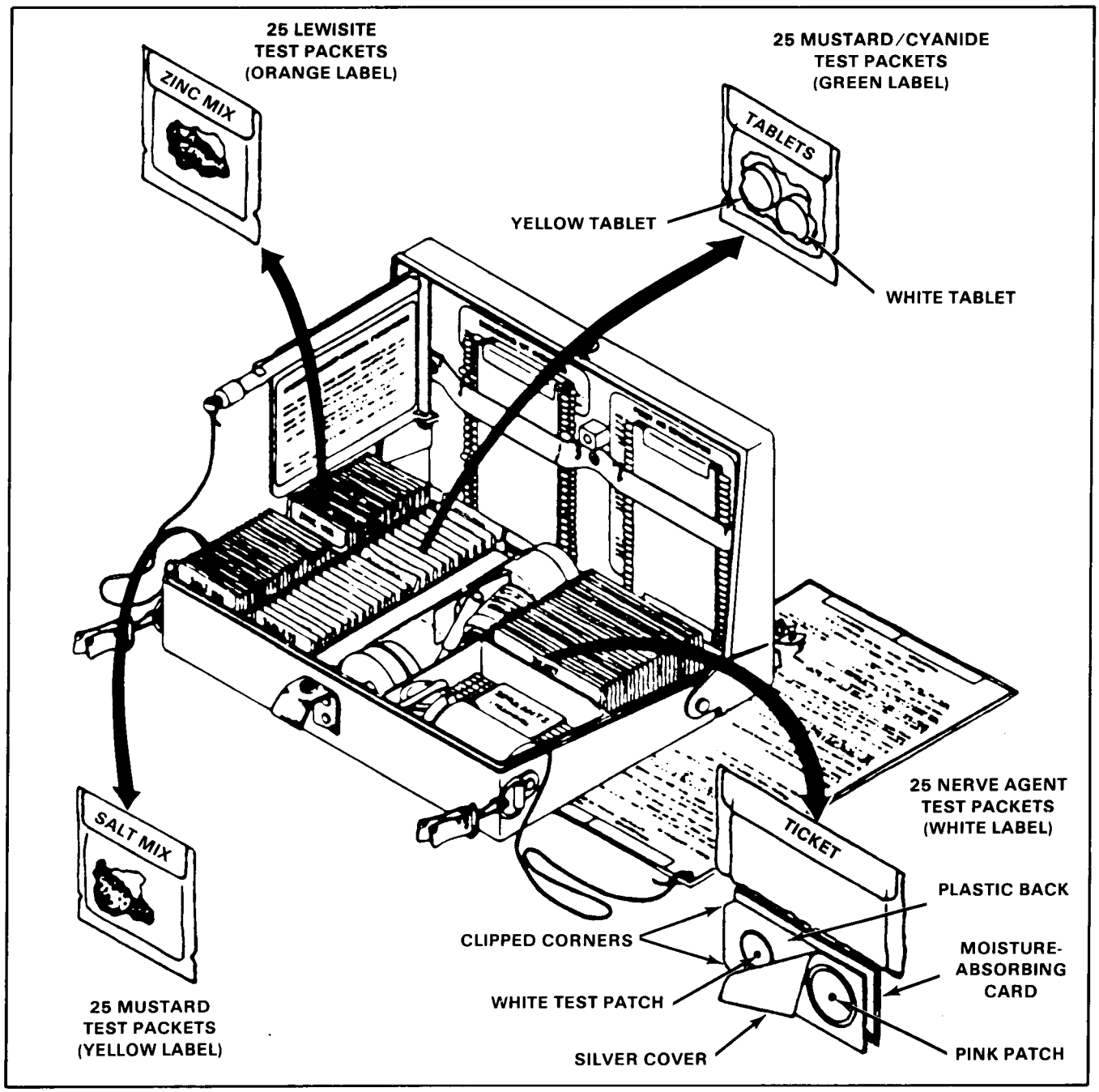

Figure 7-5. M272 Detector Kit for chemical agents in water

The M272 Detector Kit is a go/no-go test for the short-term consumption MPCs for the following agents (Table 7-2, page 7-8):

- Hydrogen cyanide.
- Lewisite.
- Sulfur Mustard.
- Nerve.

The kit is not applicable when dealing with long-term consumption figures or any situation where more than 5 liters of water per day are consumed.

Section V

NBC AND FIELD WATER PURIFICATION

DECONTAMINATION OPERATIONS

Decontaminate ROWPU equipment contaminated with NBC materials to prevent the water point operator from becoming contaminated and to prevent contaminants from getting into product water that is being produced. In line with these two objectives, the external surfaces of the ROWPU must be decontaminated. Upon occasion, the internal water circuits must be decontaminated too. Implement the following protective measures if the use of chemical or biological agents or nuclear weapons is expected:

- Secure covers and caps on all open water tanks and bags.
- Close doors and other openings on water purification units.
- Close manhole covers, spigot box covers, and pumping compartment doors on water trailers and water tank trucks.
- Place protective tarpaulins over water purification units, distribution equipment, and water containers.
- Move small portable water containers, such as FAWPSS and water cans, under shelter or into enclosed vehicles.

Procedures for field expedient decontamination of water equipment and containers are presented in this chapter. Use these procedures only when the unit is isolated from the NBC defense company or detachment which is responsible for organized decontamination of equipment and personnel.

CONTAMINATION CONSIDERATIONS

In regard to external considerations, contamination by nuclear agents would be largely fallout dust or rain containing fallout material. Contamination might include either dry or wet biological agents. Contamination by chemical agents could be in various physical forms. In the later case, the problem would be most pronounced when vicious, nonvolatile agents, such as mustard, are used. Also, thickened agents are a problem. A prime example is GD which has been made sticky with a high-consistency liquid plastic such as methyl methacrylate.

Decontaminates might not be readily available, and weathering processes are only moderately effective for NBC decontaminates. Some NW agents decay rapidly. Many BW agents are destroyed by sunlight, high temperature, and low humidity. Some CW agents evaporate, and others are decomposed by sunlight and elevated temperature. Rain washes away many NBC agents.

Weathering, including time and isolation, requires that a ROWPU unit be removed from service for an indefinite period. Rather than rely upon natural processes for decontamination, apply positive techniques and substances to make the contaminated equipment safe for use.

EXTERNAL DECONTAMINATION

To decontaminate ROWPU equipment externally, first use a simple, clean water washdown procedure. Frequently, this will do the job. The nerve agent GB, for instance, is soluble in water in all proportions and is readily washed away. If a simple washdown procedure is not completely successful, resort to the use of decontaminates. This applies particularly to cases of CW contamination. In the case of BW agent contamination, you might use fumigants such as EYO or carboxide. Water purification personnel work with an effective chemical and biological agent decontaminate called calcium hypochlorite. Use this

chemical for decontamination of equipment surfaces by following the preparation and use procedures described below.

Preparation

Construct a soakage pit or sump into which you will discharge the decontamination waste and rinse water. Personnel must wear personal protective equipment and prepare a 3 percent solution of chlorine by adding 3 canteen cups of calcium hypochlorite to 6 gallons of water.

Use

Apply the solution to the exterior of the equipment or container using brushes or brooms. One gallon of the solution should cover 8 square yards. The decontamination solution must remain in contact with the surface for at least 30 minutes. Reapply occasionally to keep the surface wet. After 30 minutes, thoroughly wash the surface with water.

INTERNAL DECONTAMINATION

The following describes how to decontaminate the internal water circuits of the ROWPU equipment. The three basic contaminants, NW, BW, and CW, will be considered in turn.

Nuclear Decontamination of ROWPU

Give consideration to the decontamination of ROWPU equipment used for processing water contaminated with radioactive materials. Two types of decontamination are involved. Gross decontamination involves quick, reasonably effective methods that can be applied in the field to remove the bulk of the contamination. Detailed decontamination, in contrast, refers to the lengthy, thorough process carried out in a rear area and intended to restore the equipment to its original clean condition. Decontamination of equipment contaminated by NW agents should proceed with awareness of the following fundamental facts:

Contamination with radioactive substances does not occur evenly. It favors rough and porous surfaces and those surfaces subject to scaling or encrustation.

Some radioisotopes are more readily absorbed on surfaces than others.

Radiological contaminants, unlike chemical or biological contaminants, cannot actually be inactivated, neutralized, or destroyed. No degree of heat or cold or chemical reaction can speed up or slow down the rate of decay. Time is the only factor capable of destroying radioactivity. Therefore, the only way of decontaminating equipment is to remove the radioactive substance and transfer it elsewhere, where it is less obnoxious.

Determination of the degree of contamination may be difficult. Most of the contamination will be inside pipes or pumps, for example. In fact, positive radiation readings outside the plumbing can be obtained only when the contaminating material is a gamma emitter. When the contaminating material is an alpha or beta emitter, the radiation particles will usually be shielded by the wall thickness and will not be detectable on the outside. In this instance, open the equipment, such as loosening a union and removing a section of pipe. Insert the probe of a beta-gamma survey meter, such as the IM-141/AN/PDR-27 radiacmeter, directly into the pipe.

Decontamination should always proceed using mild methods first and then proceeding to harsh methods. Before proceeding with equipment decontamination, establish the degree of contamination acceptable. For equipment to be transported to unrestricted areas, maintain a radiation level essentially that of the background, with the probe of a survey meter held directly on or close to the surfaces. For emergency wartime conditions, a much higher level of contamination would be acceptable, perhaps 20 mr/h or more. Radioactive substances inside pipes would not be harmful, as long as they were not leached out into the process water by a change in pH or other factors. Also, if the equipment is contaminated with fresh fission, accomplish decontamination by means of simple decay. Allow the equipment to stand idle for a week or more. This is effective if replacement equipment is available or if the equipment is not required immediately. If the radioactivity were of a long half-life or if the equipment is needed immediately, initiate gross decontamination procedures employing materials at hand, if possible. Flush the water circuits or recirculate with the following, in turn, as needed: clean, uncontaminated water and clean, uncontaminated water plus detergent. In many instances, this procedure would leave the equipment at a low enough level of contamination to be transferred to other areas.

When a more extensive decontamination is required, conduct a detailed decontamination procedure in the rear area.

Biological Decontamination of ROWPU

Materials used for decontaminating the circuits of water purification equipment contaminated with BW agents should be effective disinfectants, rapid in action, nonhazardous, noncorrosive, and available in quantity. Although very few materials meet all these criteria, many are used in spite of certain disadvantages.

Chemical Decontamination of ROWPU

The principal materials used for chemical decontamination, STB and soap and water, are also effective against biological contaminants. Since most CW agents are water soluble, the simplest and usually the most effective method of decontaminating the water circuits of the ROWPU equipment is rinsing with pure uncontaminated water. The principal mechanism is simply dissolving the agent away. In addition, hydrolysis usually takes place. Soaps, detergents, and wetting agents also may be employed by virtue of their cleansing action. Chemical decontaminates may be employed if more potent forces are required.

NBC Waste Disposal

Take great care in the disposal of NBC-laden liquid wastes generated by washdown of the equipment or by actual operation. These wastes could be a distinct hazard to the water point operators. The three basic schemes used by the nuclear power industry, and also applicable to the disposal of BW and CW wastes, areas follows:

- DI and DI - Dilute and disperse.
- CO and CO - Concentrate and confine.
- DE and DE - Delay and decay.

Reducing these principles to practice, consider one or more of the following procedures:

- Discharge downstream.
- Confine in lagoon.

NOTE: In case of BW/C W, add decontaminating chemicals.

- Expose to weathering processes.

NOTE: Air, temperature, sun, and humidity all assist in the destruction of BW and CW agents.

- Containerize and ship to a national or international landfill.

WATER PRODUCTION IN AN NBC ENVIRONMENT

The ROWPU can successfully decontaminate water up to 99 percent. A posttreatment section must be used in order to remove 99.9 percent of the NBC contaminants in the water.

NW Agent Removal

The ROWPU alone will remove a large amount of agents without the posttreatment section. RO removal characteristics for nuclear warfare agents are as follows:

- 95.5 percent of iodine, leaving the nuclear cylinder to remove 4.5 percent.
- 99.7 percent of strontium, leaving the nuclear cylinder to remove .2 percent.
- 98.8 percent of cesium, leaving the nuclear cylinder to remove 1.2 percent.

CW Agent Removal

The ROWPU will also remove large amounts of chemical agents. RO removal characteristics for various chemical warfare agents are as follows:

- GB—99.1 percent, leaving the chemical cylinder to remove .7 percent.
- VX—99.9 percent, leaving the chemical cylinder to remove .1 percent.
- BZ—99.9 percent, leaving the chemical cylinder to remove .1 percent.
- GD—99.7 percent, leaving the chemical cylinder to remove .3 percent.

BW Agent Removal

The ROWPU will also remove large amounts of biological agents. RO removal characteristics for BW agents do not exist. However, BW agents that are not removed by the RO will be eliminated by the chlorine residual maintained in the product water.

POSTTREATMENT

The 600-GPH ROWPU posttreatment system consists of two NBC cylinders (one nuclear and one chemical) and components. Agents present will determine which cylinder(s) will be used. The NBC filters are capable of decontaminating water for 100 operating hours. Upon completion of decontamination operations, dispose of the

cylinder as directed by the local commander. The cylinder marked Nuclear contains resin beads which absorb certain ions found on the nuclear battlefield. The cylinder marked Chemical contains activated carbon which absorbs the agents found on the chemical battlefield.

Setup

Position and set up the ROWPU according to TM 5-4610-215-10. Inspect NBC cylinders, hoses, and tanks for damage and missing or unserviceable parts.

Connect one 1 l/2-inch gate valve to one of your product water tanks. Next connect a 1 l/2-inch hard rubber hose from the gate valve to the suction side of one of your raw water pumps. Use this raw water pump to move water from one tank to the other.

Connect the inlet cylinder hose to the discharge side of the raw water pump using an 80- by 3/4-inch diameter hose and a 3/4- to 1 l/2-inch external thread bushing. Connect the discharge hose of an NBC cylinder to a product water tank using an 80- by 3/4-inch diameter hose, a 3/4- to 1 l/2-inch external thread bushing, and a 2-inch external thread bushing.

Complete the setup by establishing distribution from the second product tank. Connect a hard rubber hose from the tank to the suction side of the distribution pump and a canvas hose from the pump to the distribution nozzle.

Operation Procedures

Initially purify the water with the ROWPU, filling only one onion tank. When this tank is full, open the gate valve that connects it to the raw water pump and NBC cylinder and turn on the raw water pump. Pump water from the first tank, through the NBC cylinder, and into the second tank. You will distribute this water.

Dismantling of Posttreatment Section

Disconnect hoses from the pump and tanks. Drain water from the tank and all other components to the waste drain or raw water source. Remove valves from the tank and install caps. Follow the previous order in reverse to dismantle the tanks and equipment. After-operation maintenance will be done according to TM 5-4610-215-10.

NBC Cylinder Disposal

Follow local command directives to dispose of NBC cylinders that were used in an active NBC environment. However, use caution when handling and moving these items, as they are hot with contamination. Always wear MOPP gear, and perform personal decontamination after handling used NBC cylinders.

CHAPTER 8

Extreme Environment Operations

Section I

DESERTS

CHARACTERISTICS

Deserts are semiarid and arid regions containing a variety of soils in varying relief. Desert regions are characterized by:

- Extreme temperature ranges, varying between 30°F and 130°F over a 24-hour period.
- Changing visibility conditions.
- Long periods of drought, interrupted by sudden rains that bring flash floods.
- shortages of suitable ground water and virtually no surface water.
- Large areas for excellent movement, interspersed by ravines, bogs, and sand seas.
- An absence of pronounced terrain features.

SURFACE FEATURES

The basin-and-range topography typical of most desert regions is characterized by great, waste-filled valleys separating high mountain ranges. Many such valleys are interior basins with no river outlets. Streams running down the mountains lay coarse, fan-shaped alluvial deposits along the sides of the mountains and into the valleys. Most of the down-flowing water sinks and disappears into these deposits. In these valleys, you can find a permanent zone of saturation in the lower part of the valley fill. Tap this water by use of wells. The water from the upper slopes that does not sink into the deposits or is not lost by evaporation is carried by interior drainage into the lowest parts of the closed desert basins where it collects. This water is discharged to the atmosphere by evaporation, leaving salt concentrations near the surface. In locating a water supply of good quality in a basin-and-range desert region, the main problem is to avoid the common, salty water.

Playas or playa lakes are the barren clay flats resulting from the muddy accumulations which collect in the low basins and become dry after losing water by evaporation or seepage. The playas are smooth and flat and have a lake-basin type topography. The water held in the subsurface sediments keeps the surface of some playas moist. Where subsurface water escapes downward through openings in bedrock below the sediments, they are dry except after rains. Saltwater generally occurs near the surface in most playas, but fresh water may underlie it.

Other desert regions, such as those in parts of northern Africa and interior Australia, occur on high plateaus without mountain ranges. Such regions lack the deposits of alluvial sediments and receive very little rainfall. Supplies of ground water near the surface are rarely available. The only possible source of water is aquifers which transmit water from distant intake areas. If a geologic reconnaissance indicates the presence of such an aquifer, test drilling to tap it may be justified.

GROUND WATER

In desert areas, there may be undeveloped water supplies at depths of several hundred feet. Depending on your location in the desert basin and the presence of other indicators, test drilling to depths below those reached by native wells may be justified.

Occurrences

The typical desert basin can be divided into three principal parts according to ground water occurrence: the mountain range which contributes most of the runoff but has little ground water; the upper alluvial slopes, consisting of coarse debris and containing ground water at considerable depths; and the valley fill in the lower parts of the basin, which contains most of the ground water. The water in the central part of the basin is often salty. The quality of water obtained in the mountains is good but quantities are generally very small. You can obtain fresh water in the alluvial slopes by placing wells to depths of several hundred feet. Test drilling is necessary in unexplored basins because the thickness and character of deposits vary from place to place.

Indicators

Plants are extremely valuable as water indicators in desert regions. Experience has shown that various species of ground water plants not only indicate the presence of water but also its quality and approximate depth below the surface. Some species of plants reach water at or near the water table, but most plants get their water from the soil moisture above the water table. In arid regions, the presence of plants that tap the water table indicates that ground water is close to the surface. In more humid regions the greater abundance of water in the soil reduces the value of plants as indicators of a high water table. Ground water plants sometimes obtain water from a perched water table in which case the available water supply may be limited. Ground water plants generally occur in a zone around the central playa of a basin but not in the center itself because of the alkaline clay at the surface. Generally, plants other than cacti, sagebrush, and the yuccas will not grow unless there is a subterranean water table within 25 feet of the surface. Exceptions to this would be certain southwestern U.S. phraeatophytes which are known to draw upon ground water from depths in excess of 100 feet.

OPERATIONS

Combat operations in the desert pose a number of unique problems. Because there is so little water and because soldiers and equipment cannot survive without it, water is a critical item of supply in the desert. Forces trying to survive in the desert without adequate water supplies have always met with disaster. Finding and keeping water sources may be the crucial issue in desert conflicts. At the very least, water sources will be critical.

Surface Water Sources

The principal problem of water supply units in desert operations is lack of surface water sources. Although water supply units normally operate as far forward as possible, available water sources may force water supply units to operate further to the rear than normal.

Camouflage

This is another problem in desert operations. Lack of vegetation requires extensive use of camouflage nets, patterns, mud paintings, and covering of reflective surfaces to conceal water supply point operations.

Heat Stress

This is also a critical problem for soldiers working in a desert environment. Operation of water points in daytime temperatures means short periods of work followed by long periods of rest. Operation at night, to avoid heat stress, creates light discipline problems which may be unacceptable, considering how easy it is to see in desert regions. To conserve water in desert combat, greater reliance is placed on conservation procedures. However, water requirements are much greater. Therefore, you must increase resupply rates.

MAINTENANCE

The desert environment requires a very high standard of maintenance performed well away from specialized support personnel. Operators must be fully trained in operating and maintaining their equipment. Dust, sand, and wind are probably the greatest danger to the efficient functioning of equipment in the desert. It is almost impossible to avoid particles settling on moving parts and acting as an abrasive.

Lubrication

Lubrication must be the correct viscosity for the temperature and must be kept to the absolute minimum in the case of exposed or semi-exposed moving parts. Sand mixed with oil forms an abrasive paste. Lubrication fittings are critical items, Check them frequently. If they are missing, sand will enter the housing and cause bearing

failure. Teflon bearings require constant inspection to ensure that the coating is not being removed, Maintenance of engines is critical due to the strong possibility of sand or dust entering the cylinders or their moving parts when the equipment is stripped. It is essential to have screens to protect against flying sand. All tools must be kept clean and free of oil film and sand/dust. In hot climates, the film of oil necessary for operation and preservation will quickly disappear. Inspect equipment daily, paying particular attention to hidden surfaces and other likely places where corrosion might occur and not be quickly noticed. Perspiration from the hands can cause rusting. After handling the equipment, clean it, wipe it dry, and lubricate it.

Filtration

It takes comparatively little dirt to block a fuel line. Compression-ignition engines depend on clean air. Examine and clean air cleaners on every type of equipment at frequent intervals. The exact interval depends on the operating conditions but should beat least daily. Use filters when receiving fuel. Cover the gap between the nozzle and the fuel tank filler. Fuel filters will require frequent cleaning. oil filters will require replacement more frequently than usual. Engine oils will require changing more often than in temperate climates.

Electrical

Wind-blown sand and grit will damage electrical wire insulation over a period of time. Protect all cables that are likely to be damaged with tape before the insulation becomes worn. Sand will also find its way into parts of items such as spaghetti cord plugs, either preventing electrical contact or making it impossible to join the plugs. Carry a brush, such as an old toothbrush, and use it to brush out such items before they are joined.

Section II

COLD ENVIRONMENT

NORTHERN REGION CHARACTERISTICS

Northern regions, including the Arctic and subarctic, comprise about 45 percent of the North American continent and 65 percent of the Eurasian land mass. Northern regions are characterized by—

- Extreme cold and deep snow during winter months.
- Spring breakup, resulting in poor movement.
- Whiteout and grayout which cause loss of depth perception, making flying, driving, and skiing hazardous.
- Ice fog in which clouds of ice crystals cover troops, vehicles, bivouac areas, and permanent facilities, marking their location.

The winter battlefield is characterized by an environment that is at best hostile. Depending on the distance north or south of the equator, the amount of daylight is significantly less than what occurs during the summer months. The Arctic and Antarctic circles are at the latitudes beyond which there is at least one day per year where the sun does not rise above the horizon at sea level. This results in total darkness at those locations when it occurs. The temperatures on the winter battlefield range from 35°F above zero to 50°F below zero, depending on the latitude and the elevation at a particular location. Precipitation on the winter battlefield can be in the form of rain, freezing rain, sleet, snow, or any combination of these. The amount of winter precipitation can vary over a large range within a few hundred miles depending on such factors as the terrain, elevation, and proximity to large bodies of water such as oceans.

NORTHERN REGION OPERATIONS

Operations in these areas are affected by various conditions. They are discussed in the following paragraphs.

The selection, development, and proper operation of a water supply point in the northern regions require an understanding of conditions peculiar to these areas. When temperatures go below 32°F, water purification personnel have

difficulty operating and maintaining their equipment. Constant winterizing and use of the water heaters are required to prevent freezing. Winterizing, however, is not always feasible. Surface water in winter must be pumped from beneath an ice layer. To prevent freezing, it may be necessary to preheat the water during operations and keep it heated until it is issued. In addition, water purification equipment is not as effective when the temperature reaches 32°F. At this point, ROWPUs produce less than half of their rated production capability. Treatment chemicals also react differently at extremely low temperatures. For example, at 32°F, chlorine requires twice as much contact time to properly disinfect water.

Water reconnaissance is adversely affected by extreme cold. Electronic instruments, such as radiacmeter and automatic chemical test kits, become less dependable and may even fail. In the case of NBC operations, chemical detection and identification kits cannot detect solid agents. It may be necessary to take soil, snow, or vegetation samples from suspicious areas and warm them to detect and identify chemical vapors.

SOURCE DETECTION

The first step in any water supply operation is to find a source of water. On the winter battlefield, the priority is to use surface water sources whenever possible. The biggest problem is to find unfrozen water under a cover of ice and snow. In some areas it is very easy to find rivers, lakes, and ponds by simply reviewing maps and conducting a visual reconnaissance. In other areas with heavy snow covers, it is very difficult to distinguish small bodies of water from the surrounding terrain. In this case, the presence of vegetation on the shoreline or small changes in elevation maybe the only indications of an ice- and snow-covered pond or lake.

Once you locate a body of water, it is important to know the thickness of its ice cover and the depth of the water under the ice cover. Shallow surface water sources freeze to the bottom during the winter months. The ideal situation would be to have an ice cover about 6 inches thick with at least 5 feet of water under it. Fast-moving water does not freeze as fast as slow-moving water under the same temperature conditions. Fast-moving water occurs in rivers and streams wherever there is a reduction in the width of the river or stream. Another place to look for fast-moving water is on the outside of bends in the river. Other than using a motorized ice auger to bore a hole in the ice to measure its thickness and the depth of the water underneath it, the most efficient tool to use is a hand-operated ice auger like the type used by ice fishermen. This type of ice auger is much faster and safer to use than an ax or ice chisel. It also has the advantage of being much quieter and lighter than a motorized ice auger. Once you bore a hole through the ice, use a stick with a piece of wood perpendicular to its end to catch under the bottom of the ice cover to determine the ice thickness. Use another stick with depth markings as a gauge to determine the depth of water under the ice cover.

If the hole in the ice has been cleared of floating ice particles and it refills with a lot of slush y ice, it means that it is in an area where frazil ice is being transported under the ice cover. Frazil ice is the slushy ice that forms as the water travels in turbulent unfrozen sections of a river. If the water supply hole is located in an area of the river where frazil ice is being deposited, it may result in the frazil ice being sucked into the raw water pump, causing it to freeze.

Shallow ponds and lakes are relatively quiet bodies of water compared to rivers and streams. Therefore, the growth rate of ice on a lake or a pond is faster than on a river. This means that a foot of water under ice on a pond will freeze much faster than a foot of water under ice on a river. As small ponds and lakes freeze, most of the dissolved minerals are excluded from the ice that forms. This means the dissolved minerals remain in the water. As the ice cover on a pond or lake grows, the concentration of dissolved minerals in the water increases. For example, if a pond had 2 feet of water with a total dissolved solids concentration of 1,000 mg/l under an ice cover and the ice cover grew so that there was only one foot of water left under it, then the concentration of total dissolved solids in the remaining water would be about 2,000 mg/l. This is important as the TDS of the source water has an impact on the pressures required to operate the ROWPU. Also, as the temperature of the water drops, so does the production rate of the ROWPU. With decreasing temperature and increasing TDS, water production rates drop and maintenance requirements increase.

The other source of raw water is groundwater. The detection of groundwater is more difficult on the winter battlefield because of the presence of

either seasonally or permanently frozen ground. The physical and chemical characteristics of frozen ground are different from unfrozen ground. This means that the various techniques used to detect the presence of groundwater in unfrozen ground have to be adapted or modified in order to detect water that is either under or in frozen ground. Because groundwater exists only in unfrozen soil, look for unfrozen ground in or under frozen ground.

Things such as icings or ice mounds indicate the presence of shallow groundwater. Icings are large, relatively thin sheets of ice that occur when groundwater seeps to the surface and freezes as it flows across the ground. Ice mounds are large mounds of soil and water that sometimes form on relatively flat areas. Often they are as tall as a person and are present in randomly spaced clusters. Both icings and ice mounds indicate the presence of shallow groundwater. They can serve as a source of water for small units and individual soldiers as well as an indicator of a groundwater source you can develop for water point operations.

SOURCE DEVELOPMENT

When possible, locate lake and river water points on the leeward side where there is generally clearer water, less snowdrifts, and more shelter from the wind. Locate sites on a lake as far from the shore as possible, within effective camouflage limitations.

The development of a surface source of raw water on the winter battlefield usually consists of drilling a hole through the ice cover, and, in some cases, putting an insulated cover over it to prevent it from refreezing. In very cold weather, it may be necessary to periodically drain the raw water pump and the raw water hoses and bring them into a warm shelter so they do not freeze. This means that the pumps and hoses will have to be carried up the river bank. Make every effort to select a site where the river bank will not be too steep to walk up without falling when it is covered with snow. If this cannot be avoided, push the snow over the bank to form a more gently sloping ramp from the river.

Snow is a good insulator. Because of this, it should not be cleared from the ice around the water supply hole. This snow will serve as an insulating blanket and slow down the growth of ice under it. In the extreme cold, this loss of insulation could result in a shallow river freezing solid. As a result, you would have to find a new source of water and move the water supply point. The ice usually will be thinnest where it is covered by the most snow. Snow can be put into sandbags and used to build a shelter over the supply hole to prevent it from refreezing between uses. Use this same shelter to house the raw water pump to keep it from freezing.

The development of groundwater raw water sources on the winter battlefield is primarily concerned with drilling wells. Well drilling is covered in FM 5-166 and is not discussed in detail in this manual. Frozen ground adds an additional factor to be dealt with by the driller. In addition to drilling the well, the driller may have to case the well to prevent the sides of the hole from collapsing. Also, you must shelter the piping and the pumps that are above the ground surface against the cold. Because of the amount of equipment and time required to develop a groundwater well, surface water sources should always be the first priority as a source of raw water for water point operations. Groundwater wells are normally associated with rear area semipermanent or permanent facilities.

SETUP

Once you have found and developed the source of water, the next step is to set up the water purification equipment and the product water storage and distribution equipment. Depending on how cold it will be, it may be necessary to erect a tent to house the water purification unit and storage and distribution equipment. Place tents used to house the ROWPU on the ice, directly over the hole through which water is pumped or as close thereto as possible to reduce the possibility of water freezing in the intake hose. The type of tent required depends on the type of tent available in your unit. Depending on the number of product water storage tanks deployed, it may be necessary to extend the tent with additional sections if you are using the TEMPER or put up another tent for the additional tanks. The best method is to use TEMPERs that are extendable to a desired length.

Heating the tents requires using Herman Nelson, Bare Base, or other types of heaters. The number and types of heaters will depend on the allocation in your TOE. Maintain the temperature in the tent high enough so that the operators can work comfortably without wearing heavy outer

clothing such as parkas or field jackets. On the other hand, the tent should be cool enough that the operators can work in it without perspiring. Perspiring will result in chills when operators go outside. At least one more heater than what is required to maintain a comfortable working environment in the tent should be available at the water point for backup. It is important that this backup heater be available at the water point and not stored in a supply area some distance away. If it is not readily available, it is possible that the temperature in the tent could fall below freezing if the heater in use failed or had to be shut down for maintenance.

When placing the water supply equipment in the tent, keep in mind that the warm temperature in the tent will thaw the frozen ground. This means two things: one, mud will form around the tanks; second, the tanks and equipment may freeze to the ground. In this situation, place the water storage tanks on pallets to serve as walkways for the operators. Store all chemicals off the ground on pallets.

Use cribbing under the leveling jacks of the water purification equipment to prevent them from sinking unevenly into the ground when it thaws. Place planks under wheels of the water purification equipment to prevent it from getting stuck in the mud when it is time to move to another location.

When the ROWPU is set up inside a tent, attach tubing to the vent and drain lines. Empty this tubing into a container so that the water will not spill on the ground in the tent creating more mud.

Another problem you may encounter with frozen ground is grounding the electrical generators used to power the equipment. This problem has two parts. First is the problem of actually getting the ground rod into the frozen ground. The second is the problem of getting a good electrical ground in the frozen soil. In some situations, it will be impossible to drive a ground rod into frozen soil. If this occurs, bore a small hole into the soil with a soil auger, or use a shaped charge explosive to blast a hole in the frozen ground for the ground rod. Reduce the electrical resistance to the ground caused by the frozen soil by pouring a strong salt solution down the hole around the ground rod. A solution made from one pound of salt dissolved in one gallon of water will work well. While the water supply point is being set up, you must consider its survivability on the battlefield. Deploy camouflage nets whenever they are available. Take care that they do not freeze to the ground, especially in areas where water spills and ice forms. Snow is an excellent camouflage material on the winter battlefield. It is also an excellent material for the construction of field fortifications because of its ability to stop rounds from small arms and crew-served weapons.

In extreme cold, the water vapor contained in the exhaust from generator engines and other engines forms ice fog which becomes a signature easily detected by the enemy. To reduce ice fog, cool the exhaust before it is released into the atmosphere. Attach flexible steel pipe to the exhaust, and lay the pipe in a snow bank, covering it with tarpaulin. This cools the exhaust which subsequently reduces the formation of ice fog.

OPERATIONS

Once the water supply equipment has been set up, the next step is to make potable water. On the winter battlefield, there are the additional complications of keeping the water from freezing and the effects of the cold raw water temperatures.

One of the characteristics of cold water is its increased viscosity. Viscosity is a measure of the stickiness or the ease with which water flows. At the lower temperature, water is more viscous or sticky than it is at warmer temperatures. This means that at lower water temperatures a specific pump will pump less water per minute than it does at a warmer temperature. It also means that solid particles will settle slower in cold water than they will in warmer water temperatures. As a result of the viscosity effects of cold water normally found on the winter battlefield, the production rates of water supply equipment will be reduced.

Another characteristic of cold water is that it slows down the rate of chemical reactions significantly. This means that the reactions that occur when chemicals, such as polymer, are added to cold water will take longer to complete than they do in warmer water. Therefore, you must slow the flow rate of water through the equipment where these reactions take place so that the reactions can be completed and the water treated. Notice the reaction of chlorine when it is added to the product water to disinfect it. The ability of chlorine to disinfect the product water by destroying disease-causing microorganisms, such as bacteria, is

significantly reduced at cold water temperatures. At water temperatures below 49°F, a solid material known as chlorine hydrate begins to form when chlorine is added to the water. When this occurs, some of the chlorine is removed from the solution and its disinfecting capabilities are reduced. For chlorine to be most effective as a disinfectant, the water temperature should be above 50°F.

Spillage of water around a water point can become a serious safety hazard because it may freeze into a sheet of ice. Sheets of ice on the ground can cause personnel to slip and fall and can cause vehicles to skid and slide into equipment or personnel. If ice forms, increase its traction by putting sand or ashes on it. Make every effort to limit the formation of ice.

Extend all lines used to pump brine, filter backwash water, and any other types of wastewater from the water treatment equipment far enough from the tent so that ice will not be a safety hazard. If possible, place a rope or engineer tape around the area where the ice forms so personnel will not walk on it at night. Locate wastewater drains in an area where the water will not drain back into the tent. If this happens, it is possible that the tent will freeze to the ground. Then you will have to cut the tent out of the ice.

When raw water pumps are being set up, prime them with warm water. After use, drain them immediately and bring them into a warm tent so that the remaining water will not freeze. Do the same thing with the raw water hoses. Disconnect them, drain them, and bring them into the tent. When draining the raw water pumps and hoses, drain them back into the supply hole and not on the area around it. Allowing the water to run over the snow around the supply hole will result in a safety hazard for the operators, and it will reduce the insulating value of the snow, allowing the ice underneath it to grow quicker and reducing the amount of unfrozen water under it. Remember to drain the pumps and hoses and bring them into the warm tent between uses.

600-GPH ROWPU PROCEDURES

The 600-GPH ROWPU has no built-in cold weather protection. Operate the 600-GPH ROWPU within an enclosed and heated environment (TEMPER). To deploy or move the ROWPU from one operational site to another, drain the 600-GPH ROWPU as follows:

Drain the ROWPU's pipes, filters, and connections by opening all seven drain valves and all five vent valves. Facing the trailer from the towing end, jack up the left side to permit maximum water drainage through the drain valves.

After the water has stopped flowing from the drains, set the RO Pump Jog switch to Jog. Hold it there for three to five seconds to force water from the pump. Remember not to operate the RO Pump Jog switch for more than five seconds at a time as you can damage the pump. **(NOTE:** The Jog switch can be used when the RO pump Low Pressure lamp is on.) Repeat this operation until no more water comes from the Drain Pulse Dampener drain. Disconnect the plastic tubing from the bottom of the RO vessels so they can drain. Reconnect the tubing when the vessels are fully drained. Also disconnect the six plastic connectors holding the plastic lines on the backwash valve assembly timer on the multimedia filter and allow the lines to drain. After draining the lines, reconnect them to the valve assembly.

Drain the booster pump by running the Booster Pump switch, but for no more than five seconds at a time. Repeat until no more water comes from the cartridge filter drain.

Drain all chemical feed pumps by first emptying and rinsing all chemical containers and filling them with brine water. Next, set the chemical pump valves to Prime. Set all the control knobs to the maximum setting and run the pump motor to rinse the chemical pump. Chemicals can cause sickness or death if extreme care is not taken. Wear protective devices when working with these solutions. Remove intake hoses from all chemical containers. Use care in removing intake and discharge hoses from the chemical feed pump head. The plastic hoses are extremely brittle and are easily broken. Set the pump to run for 5 to 10 seconds to empty water from the chemical pump. Stop the pump motor, empty the chemical containers, and set the pump valves to the off position. Remove all hoses from the pump and drain.

Drain the distribution pump and raw water pumps. Disconnect the inlet and outlet hoses. Tip the pump toward each connection to permit drainage. Open the pump vent and drain valves.

Run the pump for five-second intervals until all water is out.

Drain the backwash pump by disconnecting the suction hose and unscrewing the drain plug on the bottom of the pump. After all water is drained, replace the drain plug.

When the ROWPU is shut down, remove the RO elements and soak them in a 1 percent formaldehyde solution for five minutes. Store the elements in plastic containers indoors or in a tent where the temperature is above freezing. Do not allow them to dry.

3,000-GPH ROWPU PROCEDURES

The 3,000-GPH ROWPU has cold weather protection built in. The winter kit has other needed items. When the unit is on deployment, avoid freeze-up. Drain the equipment to avoid damage from ice formation; however, if allowed to freeze, two to three days will be needed to thaw out the critical equipment before resuming operations.

Built-in Features

Built-in features include an insulated and weather-sealed container, floor drain sumps with electric heat tracing pads, and two diesel-fueled space heaters. Each heater draws fuel from the diesel generator fuel tank at 1/6 gallon per hour. The 24VDC electrical power is provided from the diesel generator batteries or through the AC/DC converter when the generator is operating and the main control panel heater switch is on. If not powered through the AC/DC converter, power draw is automatic from the diesel generator batteries. At -25°F, one heater may safely be powered for one hour without risk of excessive battery discharge. Other built-in features include an auxiliary power connection. This connection is for an external 120VAC power supply. With the heater and heat trace switches on, this will power the space heaters through the AC/DC converter, the pump heaters, and the sump heat tracing. Finally, the media filter and NBC filter both include a connection to use ROWPU air to rapidly purge the water from these filters to avoid severe freeze-up.

Winter Kit

The winter kit includes two electric hot air blowers, one for the distribution pump and one for the raw water pump. These blowers connect to heater outlets at each side of the ROWPU and provide heat to the inside of the pump casings when the pumps are not operating. Also included in the kit are glow plugs for each of the diesel heaters inside the container, a nonfloating intake screen for use when taking water from an ice hole, and a cable to connect one of the diesel heaters to the generator battery during transport or when the power to the ROWPU is off.

Operations

Avoid freeze-up of the RO vessels and elements during deployment to assure continued ROWPU operations. Use the space heaters to maintain ROWPU van temperature over 35°F. Do not exceed the time limitations established in TM 5-4610-232-12 without heat. Draining will avoid freeze-up of feed and waste pipes which may generate damaging ice pieces upon start-up. Draining does not remove all water from the vessels and RO elements. The RO elements hold some water after draining. If ice is present in the RO elements or vessel when the ROWPU is started, the elements may be damaged. Damage is noted by a high product water TDS because of water passing directly through holes in the membrane material. If RO vessels and elements are drained and allowed to freeze, thawing will require two days with additional heat provided to bring the temperature up to 85°F or eight days at 45°F. If freezing cannot be avoided, remove the elements, stand them on end to assure drainage, and properly seal them.

Both the polyelectrolyte and sequestrant will freeze but will not lose performance when thawed. Completely thaw before using them. If they are cloudy, mix them before using. The chemical tubing will freeze in the chemical systems if not purged. Damage is unlikely. However, thawing will delay availability. Provide protection by air purging according to long-term shutdown procedures.

Avoid freeze-up of the media filter during deployment to assure continued operation. If freezing cannot be avoided, drain and air purge the filter to avoid solidly freezing the media and internal works. If the filter is drained and allowed to freeze, thawing will require the same time and heat as required for the RO elements. If the filter is drained and purged before freezing, it can be

returned to service with some precautions. Treat the NBC filter the same as the media filter.

When deployed for a cold weather mission, the raw water and distribution pumps are enclosed in an insulating casing and the hot air blower is installed. The hot air blower keeps the pump casings warm when the pumps are not operating. While the pumps are operating, the water flow will prevent freezing. When securing the ROWPU or when the diesel generator fails, drain the pumps within 15 minutes.

Flowing water will not easily freeze in the piping, so there is little danger of freeze-up while the ROWPU is running. When the ROWPU is shut down during cold weather, however, water in the pipes can freeze. Expansion during freezing will damage piping. Therefore, drain the ROWPU when it is stored outside in cold weather.

When the ROWPU is running, there is no danger of hoses freezing. The hoses will not freeze rapidly, but ice may build up at the end connectors and begin to restrict the water flow. Covering the hoses with 12 inches of dirt or snow will reduce this problem. Ice will begin to form in the hoses within a short time after shutdown at -25°F. If the ROWPU is to be shut down longer than 15 minutes, disconnect the hoses at all joints and fully drain them by walking out all water. Start-up is simplified if lay-flat hoses are also rolled and placed within the ROWPU until needed.

Shutdown

When shutting down to a secured condition, perform normal shutdown procedures. In addition, the following actions should be taken in cold weather.

While the media filter is being backwashes, remove the product hose sections and the product shut-off valve. Cap the van connection. Immediately after backwashing is complete, close the feed valve, remove the raw water discharge hose and adapter, and install the cap on the van connection. Disconnect all canvas hose sections and quickly walk out the hose sections to remove water. Roll up the hoses and place them inside the van. Disconnect all waste hose sections and walk out the water. Reconnect for use during cleaning procedures. Disconnect and drain all deployed raw water suction hose sections. Open the raw water drain and priming valves.

After beginning the RO cleaning or sanitizing procedure, drain and purge the media filter by opening the media filter lower drain and vent valves. Continue the air purge until only air is observed at the drain. Watch the air pressure gauge. Do not allow pressure to drop below 200 psig. If it does, close the valve and wait for additional air pressure to build before continuing. After the media filter is drained, close the hose valve and leave the filter drain open. If on an NBC mission, drain and purge the NBC filter. When cleaning and/or sanitizing procedures are complete, drain the water tanks, disconnect the hoses, and open the distribution pump drain valve. Immediately roll up the dispensing hoses with the nozzles locked open to remove the water, and place them inside the van. Maintain operation of the space heaters to avoid freeze-up.

Continue to operate the diesel generator to provide power for the heaters. An auxiliary power connection provides 120VAC power to the van and high-pressure pump package space heater as well as to the heat trace and pump hot air blower circuits. Power can be supplied by an auxiliary generator or another ROWPU at the water point, allowing the diesel generator to be secured. The space heater's power automatically shifts to the diesel generator batteries when the generator is shut down and auxiliary power is not supplied. The Heater Power Supply On/Off switch will control the heaters. When drawing from the batteries, stop heater two to avoid running down the batteries. If the ROWPU is being shut down for storage, remove the RO elements after soaking them with sodium metabisulfate. Drain the RO vessels before the heaters are stopped.

Movement

Preparation for movement in cold weather involves the following additional steps. Maintain generator and heater operations until pack-up is complete. Open all vents and drains. Do not leave RO element sanitizing solution in the RO vessels. Uncap all ROWPU van external connections. Air purge the media filter, the NBC filter, and all three chemical systems. Now follow normal pack-up procedures. Stop heater one, close van doors, and secure the generator. The remaining operating heater (heater two) will prevent freeze-up during transport. After one hour, battery drain may be excessive.

STORAGE AND DISTRIBUTION PROCEDURES

Keep any product water being stored or distributed on the winter battlefield from freezing. There are several ways to accomplish this procedure.

Elevate the product water storage tanks on pallets off the ground in a warm tent. If the tanks are outside, keep ice and snow from the top of the tanks. Remove ice and snow from connections to ensure proper assembly and disassembly of components. Avoid any unnecessary folding, unfolding, or rolling of tanks which might cause cracking or damage to the material. At the water supply point, bring product water distribution hoses into the tent when not in use. Personnel at the water supply point should use insulated, waterproof gloves when dispensing water. Be careful when handling hose assemblies and distribution nozzles. Before attempting to use nozzles, remove any accumulation of ice or snow and check for free movement of the nozzle on swivels.

Use pumps to prevent freezing in storage tanks by recirculating water between tanks. The number of pumps required and their location depend on the number of storage tanks used. Keep engine fuel tanks full to prevent condensation. Drain and service fuel filters more frequently than under normal conditions. Before starting engine-driven pumps, remove any accumulation of ice or snow from spark plugs and wiring. Make sure the inlet air temperature shutter on the engine is set for winter operation. Run engines at low speed, and allow them to warm to the operating temperature before applying full loads.

APPENDIX A

Formulas For Water Supply Problems

USE OF FORMULAS TO SOLVE PROBLEMS

This appendix gives formulas for use in solving water supply problems often found in the field. Each formula is accompanied by a problem solved by using the formula.

CONVERSION OF VOLUME TO WEIGHT OF WATER

The formula and a problem for conversion of volume to weight of water are given below.

a. Formula.

Weight of water in pounds = Cubic feet of water x 62.4

b. Illustrative Problem. What is the weight of water in a full tank with a volume of 470 cubic feet?

Weight of water = Cubic feet x 62.4
= 470 x 62.4
= 29,328 pounds

CONVERSION OF VERTICAL FEET OF WATER TO POUNDS PER SQUARE INCH

The formula and a problem for conversion of vertical feet of water to pounds per square inch are given below.

a. Formula.

Pounds per square inch = Vertical feet of water x 0.43

b. Illustrative Problem. What is the pressure in pounds per square inch at the bottom of a storage tank with 25 vertical feet of water?

Pounds per square inch = Vertical feet of water x 0.43
= 25x 0.43
= 10.75

CONVERSION OF POUNDS PER SQUARE INCH TO VERTICAL FEET OF WATER

The formula and a problem for conversion of pounds per square inch to vertical feet of water are given below.

a. Formula.

Vertical feet of water= Pounds per square inch = 2.3

b. Illustrative Problem. How many vertical feet of water are in a tank that is 45 feet high? A pressure gauge at the bottom of the tank reads 9 pounds per square inch.

Vertical feet of water = Pounds per square inch x 2.3
= 9 x 2.3
= 20.7

CONVERSION OF VOLUME TO GALLONS OF WATER

The formula and a problem for conversion of volume to gallons of water are given below.

a. Formula.

Gallons of water= Cubic feet of water x 7.5

b. Illustrative Problem. How many gallons of water are in a tank with 400 cubic feet of water?

Gallons of water = Cubic feet of water x 7.5

= 400 x 7.5

= 3.000

CONVERSION OF GALLONS OF WATER TO CUBIC FEET

The formula and a problem for conversion of water to cubic feet are given below,

a. Formula

$$\text{Cubic feet} = \frac{\text{Gallons of water}}{7.5}$$

b. Illustrative Problem. How many cubic feet of tank space are needed to store 1,500 gallons of water?

$$\text{Cubic feet} = \frac{\text{Gallons of water}}{7.5}$$

$$= \frac{1{,}500}{7.5}$$

$$= 200$$

CALCULATION OF VOLUME OF WATER TANKS

The formula and two problems for calculation of volume of water tanks are given below.

a. Formula for Rectangular Tank

$V = L \times W \times H.$

where V = Volume in cubic feet

L = Length in feet

W = Width in feet

H = Height in feet

b. Formula for Cylindrical Tank.

$V = \pi r^2 H$

where V = Volume in cubic feet

π = 3.14 or 22/7, a constant

r = Radius (half of the diameter) of the tank

H = Height in feet

c. Illustrative Problems. What is the volume of a rectangular tank that is 10 feet long, 7 feet wide, and 4 feet high?

$$V = L \times W \times H$$
$$= 10 \times 7 \times 4$$
$$= 280 \text{ cubic feet}$$

What is the volume of a cylindrical tank that has a radius of 4 feet and is 7 feet high?

$$V = \pi r^2 H$$
$$= 3.14 \times 4^2 \times 7$$
$$= 3.14 \times 16 \times 7$$
$$= 351.68 \text{ cubic feet}$$

CALCULATION OF QUANTITY OF WATER FLOWING IN A STREAM

The formula and a problem for calculation of quantity of water flowing in a stream are given below.

a. Formula.

$$Q = 6.4 \times A \times V$$

where Q = Quantity of water in gallons per minute

6.4 = Constant.

There are 7.5 gallons of water per cubic foot. However, because of error in stream measurement, 7.5 is reduced to 6.4.

V = Velocity of the stream in feet per minute.

This figure is obtained by noting the time it takes a twig or floating object to travel a known distance.

A = Area of the stream in square feet.

This figure is obtained by multiplying the width of the stream by the depth of the stream.

b. Illustrative Problem. A stream has an average depth of 2 feet and a width of 16 feet. A twig floats 13.3 feet per minute. How many gallons per minute are flowing in the stream?

$$Q = 6.4 \times A \times V$$
$$= 6.4 \times 2 \times 16 \times 13.3$$
$$= 2{,}732.8 \text{ gallons per minute}$$

CALCULATION OF POUNDS OF CHLORINE

The formula and a problem for calculation of pounds of chlorine are given below.

a. Formula.

$$\text{Pounds of chlorine} = \frac{\text{Gallons of water} \times 8.3 \times \text{parts per million}}{1{,}000{,}000}$$

b. Illustrative Problem. If eight parts per million of chlorine are required for 3,000 gallons of water, how many pounds of chlorine will be needed?

$$\text{Pounds of chlorine} = \frac{\text{Gallons of water x 8.3 x parts per million}}{1{,}000{,}000}$$

$$= \frac{3{,}000 \text{ x } 8.3 \text{ x } 8}{1{,}000{,}000}$$

$$= 0.1992$$

CALCULATION OF GALLONS OF WATER THAT CAN BE TREATED WITH A GIVEN SUPPLY OF CHLORINE

The formula and a problem for calculation of' gallons of water that can be treated with a given supply of chlorine are given below.

a. Formula.

$$\text{Gallons of water} = \frac{\text{Pounds of chlorine x 1,000,000}}{\text{8.3 x parts per million}}$$

b. Illustrative Problem. There are 4.15 pounds of chlorine on hand. The operator is using five parts per million of chlorine as the average treatment dosage. How many gallons of water can the operator treat before running out of chlorine?

$$\text{Gallons of water} = \frac{\text{Pounds of chlorine x 1,000,000}}{\text{8.3 x parts per million}}$$

$$= \frac{4.15 \text{ x } 1{,}000{,}000}{8.3 \text{ x } 5}$$

$$= 100{,}000$$

CALCULATION OF THE PARTS PER MILLION OF CHLORINE PRESENT IN A TREATMENT TANK

The formula and a problem for calculation of parts per million of chlorine present in a treatment tank are given below.

a. Formula.

$$\text{Parts per million} = \frac{\text{Pounds of chlorine x 1,000,000}}{\text{Gallons of water x 8.3}}$$

b. Illustratiue Problem. If 16.6 pounds of chlorine are added to 20,000 gallons of water, how many parts per million of chlorine are present?

$$\text{Parts per million} = \frac{\text{Pounds of chlorine x 1,000,000}}{\text{Gallons of water x 8.3}}$$

$$= \frac{16.6 \text{ x } 1{,}000{,}000}{20{,}000 \text{ x } 8.3}$$

$$= 100$$

CONVERSION OF POUNDS OF CHLORINE TO OUNCES OF CALCIUM HYPOCHLORITE

The formula and a problem for conversion of pounds of chlorine to ounces of calcium hypochlorite are given below.

a. Formula.

Ounces of calcium hypochlorite = Pounds of chlorine x 22.9

b. Illustrative Problem. If 1/2 pound of chlorine will be needed to treat a water source, how many ounces of calcium hypochlorite will be required?

Ounces of calcium hypochlorite = Pounds of chlorine x 22.9

= 0.5 x 22.9

= 11.45

APPENDIX B

Chlorine Dosage

Use Table B-1 (page B-1) to determine how much of a material with chlorine must be used to chlorinate a given amount of water. To use the chart, follow these steps.

Select the desired parts of chlorine per million of water.

Determine the strength of the solution to be used. This decision will determine which chlorine-containing material to use. The materials to be used are as follows:

- Liquid sodium hypochlorite for a 5 percent solution.
- Solid chlorinated lime for a 25 percent solution.
- Solid calcium hypochlorite for a 70 percent solution.
- Gaseous chlorine for a 100 percent solution.

Compute the number of gallons to be chlorinated.

Read across the gallons-of-water line and down the parts-per-million/strength-of-solution column. Where they intersect is the amount of material required.

Table B-1. Chlorine dosage calculator

Desired parts per million	1	1	1	1	5	5	5	5	25	25	25	25	50	50	50	50	100	100	100	100	200	200	200	200
Strength of chlorine solution	5%	25%	70%	100%	5%	25%	70%	100%	5%	25%	70%	100%	5%	25%	70%	100%	5%	25%	70%	100%	5%	25%	70%	100%
Gallons of water to be chlorinated 50,0000	1 gal	1 lb 11 oz	10 oz	6.7 oz	5 gal	8 lb 6 oz	3 lb	2 lb 2 oz	25 gal	41 lb 12 oz	14 lb 15 oz	10 lb 7 oz	50 gal	83 lb 7 oz	30 lb	20 lb 14 oz	100 gal	166 lb 13 oz	59 lb 10 oz	41 lb 12 oz	200 gal	333 lb 10 oz	119 lb 4 oz	83 lb 7 oz
25,000	2 gt	134 oz	5 oz	3.34 oz	2.5 gal	4 lb 3 oz	1 lb 8 oz	1 lb 1 oz	125 gal	20 lb 14 oz	7 lb 8 oz	5 lb 4 oz	25 gal	41 lb 12 oz	15 lb	10 lb 7 oz	50 gal	83 lb 7 oz	29 lb 13 oz	20 lb 14 oz	100 gal	166 lb 13 oz	59 lb 10 oz	41 lb 12 oz
10,000	25.6 oz	5.5 oz	2 oz	1.34 oz	1 gal	1 lb 11 oz	9.6 oz	6.72 oz	5 gal	8 lb 6 oz	3 lb	2 lb 2 oz	10 gal	16 lb 11 oz	6 lb	4 lb 3 oz	20 gal	33 lb 6 oz	12 lb	8 lb 6 oz	40 gal	66 lb 12 oz	23 lb 14 oz	16 lb 11 oz
5,000	12.8 oz	2.8 oz	1 oz	.61 oz	2 qt	14 oz	4.8 oz	3.36 oz	2.5 gal	4 lb 3 oz	1 lb 8 oz	1 lb 1 oz	5 gal	8 lb 6 oz	3 lb	2 lb 2 oz	10 gal	16 lb 11 oz	6 lb	4 lb 3 oz	20 gal	33 lb 6 oz	11 lb 12.4 oz	8 lb 6 oz
2,000	5.12 oz	1.1 oz	.4 oz	.26 oz	25.6 oz	6 oz	1.92 oz	1.35 oz	1 gal	1 lb 11 oz	9.6 oz	6.68 oz	2 gal	3 lb 6 oz	11 lb 4 oz	13.5 oz	4 gal	6 lb 11 oz	2 lb 62 oz	1 lb 11 oz	8 gal	13 lb 6 oz	4 lb 12.4 oz	3 lb 6 oz
1,000	2.56 oz	.55 oz	.2 oz	.14 oz	12.8 oz	.3 oz	.96 oz	.68 oz	2 qt	13.6 oz	4.8 oz	3.34 oz	1 gal	1 lb 11 oz	9.6 oz	6.72 oz	2 gal	3 lb 6 oz	1 lb 3.1 oz	13.5 oz	4 gal	6 lb 11 oz	2 lb 6.2 oz	1 lb 11 oz
500	1.28 oz	.28 oz	.1 oz		6.4 oz	1.4 oz	.48 oz	.34 oz	1 qt	6.72 oz	2.4 oz	1.67 oz	2 qt	13.5 oz	4.8 oz	3.36 oz	1 gal	1 lb 11 oz	9.54 oz	6.72 oz	2 gal	3 lb 6 oz	1 lb 3.1 oz	134 oz
200	.512 oz	.11 oz			2.56 oz	.56 oz	.2 oz	.14 oz	12.8 oz	2.68 oz	.96 oz	.68 oz	25.6 oz	5.4 oz	1.92 oz	1.35 oz	51.2 oz	10.7 oz	3.82 oz	2.67 oz	102.4 oz	1 lb 6 oz	7.64 oz	5.34 oz
100	.256 oz				1.28 oz	.28 oz	.1 oz	.64 oz	.64 oz	1.35 oz	.48 oz	.34 oz	12.8 oz	2.7 oz	.96 oz	.68 oz	25.6 oz	5.4 oz	1.91 oz	1.35 oz	51.2 oz	10.7 oz	3.82 oz	2.67 oz
50	.13 oz				.64 oz	.14 oz			3.2 oz	.68 oz	.24 oz	.17 oz	6.4 oz	1.4 oz	.48 oz	.34 oz	12.8 oz	2.72 oz	.96 oz	.68 oz	25.5 oz	5.4 oz	1.91 oz	1.34 oz
25	.064 oz				.32 oz				1.6 oz	.34 oz	.12 oz		3.2 oz	.68 oz	.24 oz	.17 oz	6.4 oz	1.36 oz	.48 oz	.34 oz	12.8 oz	2.72 oz	.96 oz	.67 oz
10	.026 oz				.128 oz				.64 oz	.14 oz			1.28 oz	.3 oz	.1 oz		2.56 oz	.56 oz	.192 oz	.14 oz	5.12 oz	1.12 oz	.384 oz	.27 oz
5	.013 oz				.064 oz				.32 oz				.64 oz	.14 oz			1.28 oz	.28 oz	.1 oz		2.56 oz	.56 oz	.192 oz	.14 oz

Materials used are as follows: 5%-sodium hypochlorite (liquid) 25%-chlorinated lime (solid) 70%- calcium hypochlorite (solid) 100%-gaseous chlorine

APPENDIX C

Purification Equipment Characteristics

Section I

600-GPH ROWPU

CHARACTERISTICS AND FEATURES

The 600-GPH ROWPU is used by divisional and brigade water purification elements and, in some cases, in corps and EAC units for the production of potable water from fresh, brackish, or saline water sources. The unit is trailer-mounted, air droppable, and requires a dedicated 5-ton prime mover. The 600-GPH ROWPU is designed to purify 960 gallons of water per hour from fresh water sources (1,000 ppm TDS or less) at a temperature of 77°F. This ROWPU can produce 760 gallons of water from saline water sources (35,000 ppm TDS or more) at a temperature of 77° F. As the raw water temperature drops, the production capability of the ROWPU is reduced, so that, at 50°F, this ROWPU produces 300 GPH on fresh water sources and 200 GPH on saline water sources. Additionally, other external factors, such as turbidity, also affect production rates. This ROWPU is capable of effectively removing potentially hazardous concentrations of all known chemical and biological agents and radioactive by-products of nuclear origin.

The ROWPU is 18 feet long, 8 feet high, and 8 feet wide. It weighs about 8 1/2 tons, including the trailer and the required 30KW generator. Figure C-1 (page C-1) shows the 600-GPH ROWPU from the top with the canvas cover removed. To provide room for all operating components, store material in layers. The top layer consists of rolled-up suction hoses on top of two folded water tanks. Stored between the tanks is a sledge hammer and a collapsed telescopic aluminum paddle. Next to the tanks is a stack of five plastic pails with chemical names on their sides. On the same side of the ROWPU, you will find two storage boxes fastened with a strap under the tanks. These boxes contain various chemicals, tools, and installation items. Nine sections of suction hose are stored on the side of the ROWPU frame.

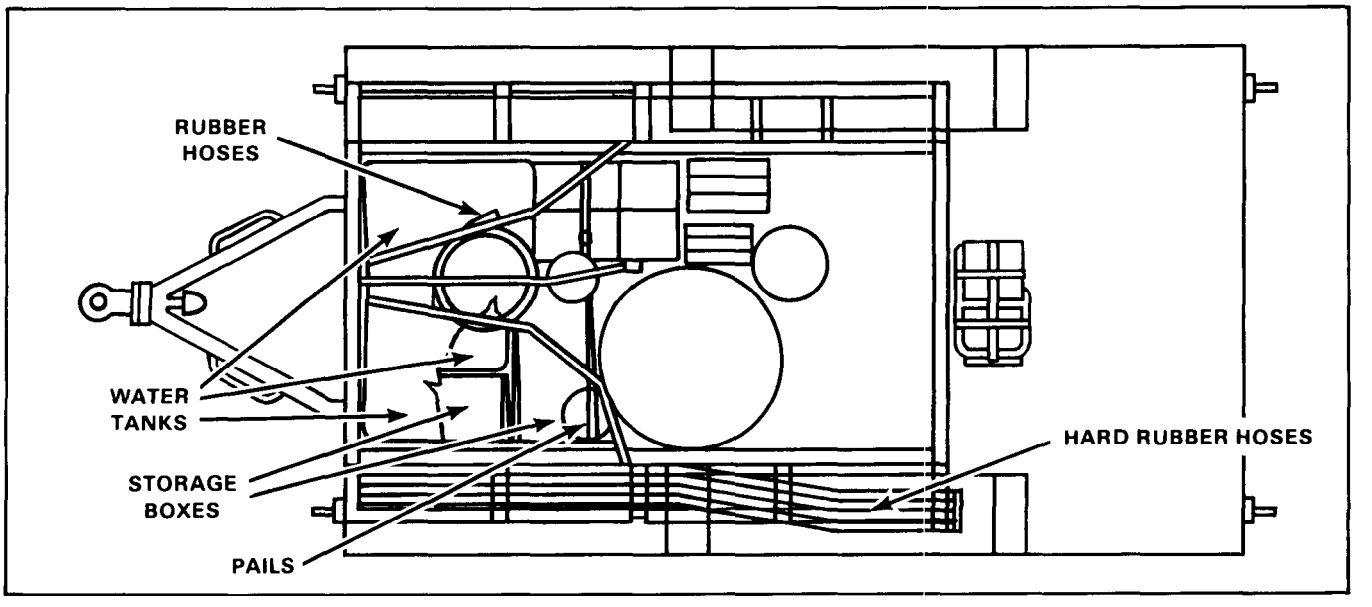

Figure C-1. Top layer of stored material

In the second layer, you will find two raw water pumps and the backwash pump (Figure C-2, page C-2). The pumps are covered with canvas and strapped down. The distribution pump is located at the rear of the unit, next to the generator. The ROWPU also includes a portable step which is strapped down with the distribution pump. On the right side are 1 1/2-inch and 2-inch diameter discharge canvas hoses, rolled up. A raw water float is in the center of the ROWPU next to the two NBC cylinders. Figure C-3 (page C-3) shows the ROWPU with all operating equipment removed.

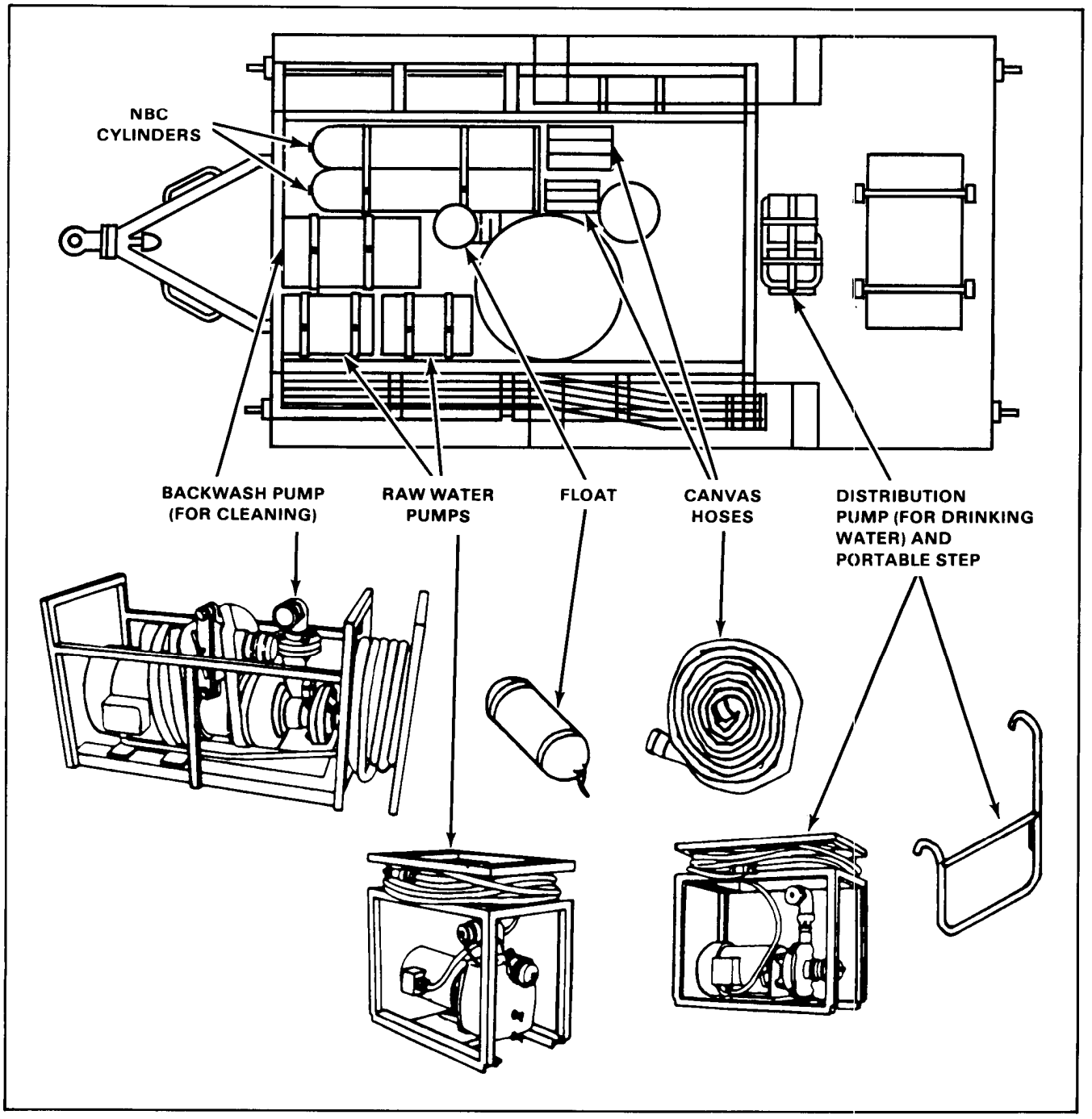

Figure C-2. Second layer of stored material

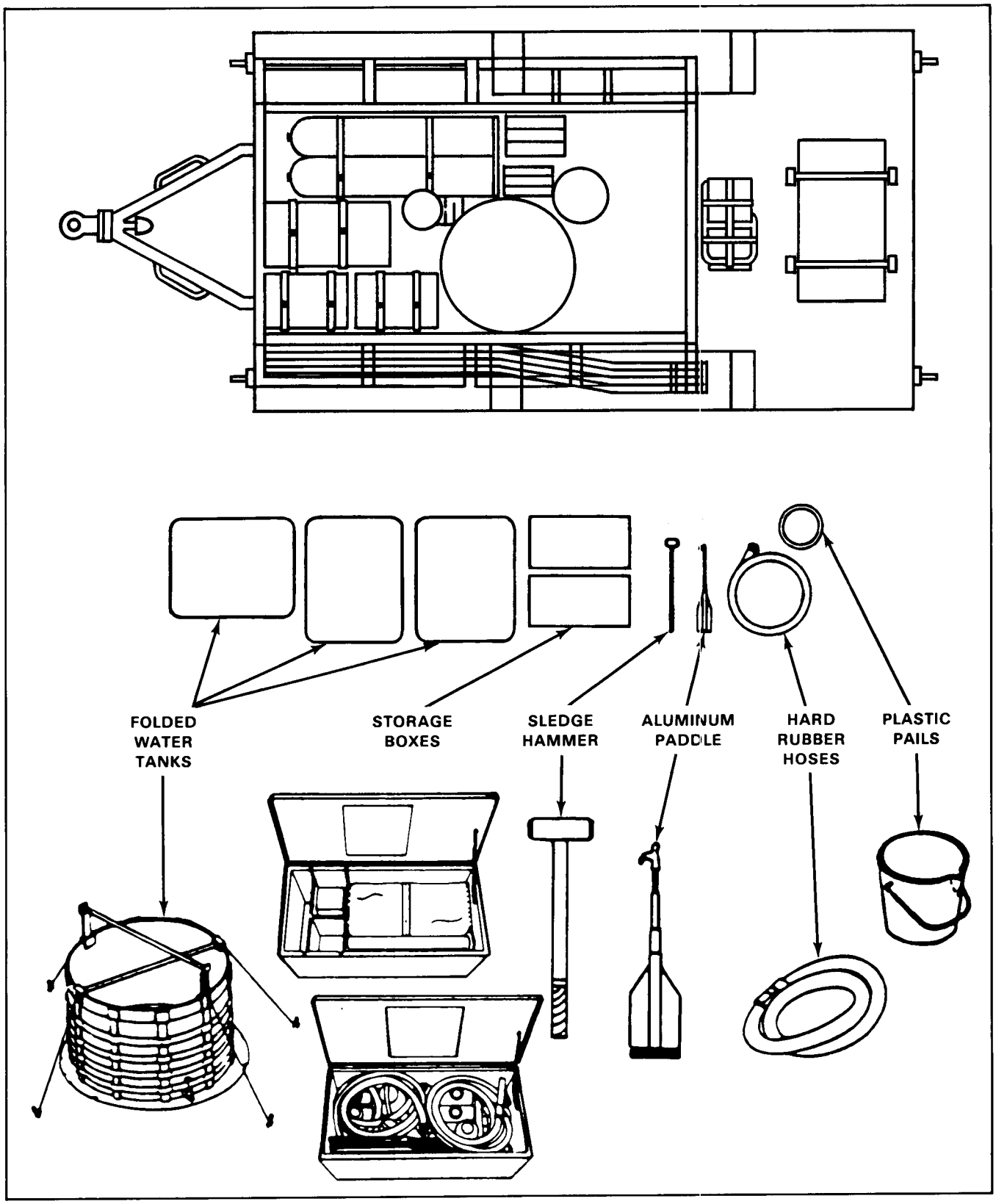

Figure C-3. Third layer of stored material

MAJOR COMPONENTS

There are five major components of the 600-GPH ROWPU. They are described below.

Internal Pumps

There are three types of internal pumps. They are described below.

Booster pump. The booster pump forces water from the multimedia filter through the cartridge filter. The pump is a centrifugal type rated at 30 GPM at 50 feet of head. It is driven by an electric 1 HP motor. The control switch for the booster pump is located on the control panel between the RO Pump switch and the Chemical Feed Pump switch.

RO pump. The RO pump applies very high pressure (above 800 psi) to raw, filtered water from the cartridge filter to the RO pressure vessels. The pump is a five-piston, positive-displacement type rated at 51 GPM at 980 psi. A 20 HP electric motor drives it. The controls for the RO pump consist of a low-pressure lamp, a high-pressure lamp, a reset switch, and a start switch with indicator lamp. All RO controls and lamps are located on the control panel.

Chemical feed pumps. The chemical feed pumps inject treatment chemicals into the flow of water being treated. There are four chemical feed pumps, each rated at 3.17 GPH. The four pumps are driven by a 1/3 HP electric motor.

External Pumps

There are three different external pumps. They are described below.

Backwash pump. The backwash pump forces brine water from the brine tank through the multimedia filter to flush out accumulated material. It is also used to circulate the brine/citric acid solution through the RO elements during membrane cleaning. The pump is a centrifugal type rated at 120 GPM at 70 psi. A 10 HP electric motor drives it.

Distribution pump. This pump delivers water from the product storage tanks into the supported unit's vehicles and/or containers. The distribution pump is a centrifugal type rated at 30 GPM at 50 feet of head. A 1 HP electric motor drives it.

Raw water pumps. The two raw water pumps draw water from the source and move it to the ROWPU. Each raw water pump is a centrifugal type rated at 30 GPM at 105 feet of head. A 2 HP electric motor drives each pump.

Multimedia Filter

This filter is the first stage of treatment. The multimedia filter removes solids that pass through the input strainer. It is rated at 6.5 GPM per square foot.

Cartridge Filter

The cartridge filter removes suspended solids not removed from the process water by the multimedia filter. The cartridge canister contains eight cartridges. The cartridge canister is rated at 35 GPM maximum flow.

Pulse Dampener

The pulse dampener is a bell-shaped metal tank used to reduce pulses in the process water flow caused by the pistons in the positive displacement RO pump.

RO Vessels

The RO vessels (four each) are reinforced canisters designed to withstand the high pressures required for RO operations. Each vessel contains two RO membrane elements. Each element is a 6-inch roll of semipermeable, spiral-wound, poly-plastic membrane. Under pressure, the membrane allows the process of RO to separate the dissolved solids from the product water. The dissolved solids, called brine flow, are then passed from the ROWPU as waste.

Control Panel

The control panel consists of various gauges, valves, lights, switches, and hose connections. The control box consists of the pump control switches and indicator lamps. The control box is located on the left side of the control panel. The circuit breaker panel is located in the junction box and consists of circuit breakers for the pumps, utility outlets, and backwash timer. The location of controls on the panel is shown in Figure C-4 (page C-5) and their functions are described in Table C-1 (pages C-5 and C-6). The normal reading of all gauges is shown in Table C-2 (page C-7).

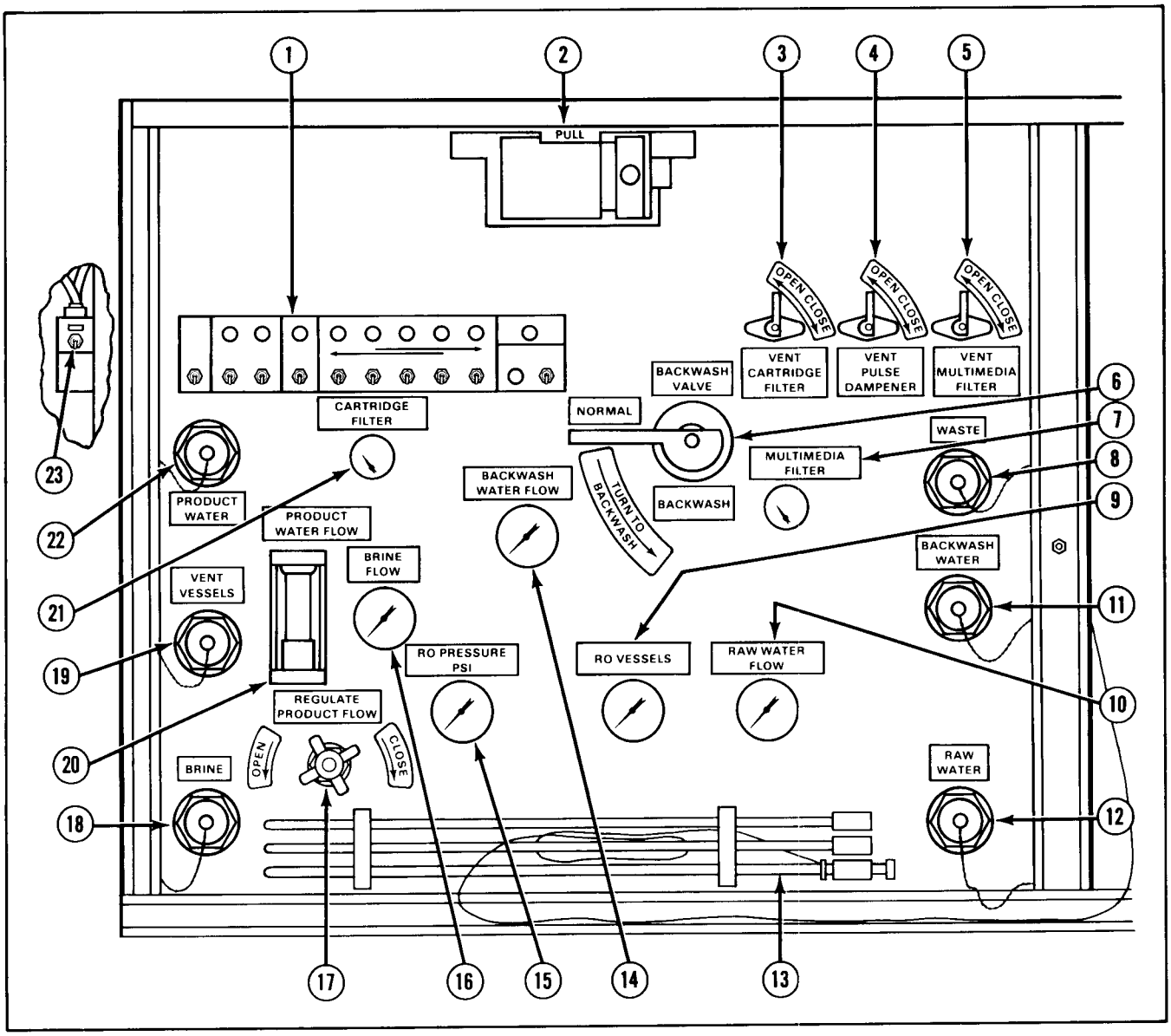

Figure C-4. Control panel

Table C-1. Control panel functions

KEY	CONTROL OR INDICATOR	FUNCTION
1	Control Box Assembly	Indicator lamps; switches to start, operate, and stop (including Emergency Stop) all pumps.
2	Panel Light	Provides light for inside of the ROWPU and for the control panel. It is mounted on a movable bracket that can be pulled forward to provide more light on the control panel.
3	Vent Cartridge Filter Valve	Relieves air from cartridge filter.

Table C-1. Control panel functions (continued)

KEY	CONTROL OR INDICATOR	FUNCTION
4	Vent Pulse Dampener Valve	Relieves air from pulse dampener.
5	Vent Multimedia Filter Valve	Relieves air from multimedia filter.
6	Backwash Valve	Backwash valve has two positions: Normal and Backwash. In Normal, the valve closes the backwash inlet and raw water flows through the ROWPU. In Backwash, the raw water inlet closes and water flows through the backwash inlet. After backwashing, return the valve to the Normal position.
7	Multimedia Filter Gauge	Indicates differential pressure across the multimedia filter.
8	Waste	Connection for dirty brine used to backwash the multimedia filter.
9	RO Vessels Gauge	Indicates differential pressure across the RO vessels.
10	Raw Water Flow	Measures in GPM the amount of water drawn in by raw water pumps and fed into the ROWPU.
11	Backwash Water	Connection for backwash hose.
12	Raw Water	Connection for hose from raw water pumps.
13	Ground Rod	Used to ground the ROWPU. Protects personnel from electrical shock.
14	Backwash Water Flow Gauge	Measures amount of water flowing through the multimedia filter during backwash cycle.
15	RO Pressure PSI Gauge	Shows discharge pressure of the RO pump in psi. Gauge reading depends on setting of Regulate Product Flow valve.
16	Brine Flow Meter	Measures amount of brine flow from the ROWPU in GPM.
17	Regulate Product Flow Valve	Closes the outlet of the RO vessels. Controls the rate of flow of the product water. Regulates output pressure of the RO pump.
18	Brine	Connection for brine water hose from the ROWPU to the brine tank.
19	Vent Vessels	Diverts water from RO vessels to allow multimedia filter to stabilize. Also inputs RO element cleaning solution.
20	Product Water Flow	Shows the number of GPM of drinking water put out by the ROWPU.
21	Cartridge Filter Gauge	Measures pressure drop across the cartridge filter.
22	Product Water	Connection for drinking water from ROWPU to product water tank.
		CAUTION Element Cleaning Switch must be Off when backwashing the multimedia filter. Operating RO element cleaning switch during backwashing can cause damage to the RO elements.
23	RO Element Cleaning Switch	Used to operate backwash pump during cleaning of RO elements (switch must be Off at all other times).

Table C-2. Normal gauge readings

GAUGE/INDICATOR	NORMAL READING	TROUBLE POINT READING
Cartridge Filter	1 to 20 psid	Over 20 psid
Multimedia Filter	0 to 10 psid	5 psid over first reading
Raw Water Flow	27 to 33 GPM	Drop to 25 GPM or less
Brine Flow	16 to 24 GPM	Below 15 GPM
Product Water Flow		
Saltwater	6 to 12 GPM	Above 12 GPM
Fresh Water	Up to 16 GPM	Above 16 GPM
Brackish Water	Up to 16 GPM	Above 16 GPM
RO Pressure PSI		
Saltwater	Not to exceed 960 psig	Above 960 psig
Fresh Water	Not to exceed 500 psig	Above 500 psig
RO Vessels	50 to 100 psid	Above 100 psid
TDS of Product Water	Below 1,000 ppm	Above 1,000 ppm

Section II

3,000-GPH ROWPU

CHARACTERISTICS AND FEATURES

The 3,000-GPH ROWPU is intended for use by nondivisional corps and EAC units for DS and GS water production operations. It is contained within a special 8- by 8- by 20-foot ISO container with an overpack. The 3,000-GPH ROWPU is mounted on a standard 30-foot military trailer and can be shipped aboard USAF aircraft. It is powered by a 60KW utility diesel generator that is mounted on the rear of the trailer (Figure C-5, page C-8). The 3,000-GPH ROWPU is designed to purify 3,000 gallons of water per hour from fresh water sources (1,000 ppm TDS or less) at a temperature of 77° F. This ROWPU can produce 2,000 gallons of water from saline water sources (35,000 ppm TDS or more) at a temperature of 77°F. As the raw water temperature drops, the production capability of the ROWPU is reduced, so that, at 50°F, this ROWPU produces 1,500 GPH on fresh water sources and 1,000 GPH on saline water sources. Other external factors, such as turbidity, also affect production rates. This ROWPU is capable of effectively removing potentially hazardous concentrations of all known chemical and biological agents and radioactive by-products of nuclear origin.

MAJOR COMPONENTS

The raw water system, water filtration system, RO system, chemical feed system, and the air control system are major components of the 3,000-GPH ROWPU. See Figure C-6 (page C-9). They are described in the following paragraphs.

The Raw Water System

The raw water system draws raw water from the source thru a coarse screen. The raw water pump is a self-priming type pump. When the pump casing is filled with water and the pump is turned on, it will pull air out of the suction hose and pull the

water up to the pump. Use a hand- operated prime pump to assist the raw water pump to quickly pull up the water. Use either a water can or the hand prime pump for initial priming. Without the hand pump, a lift of 15 feet through five hose sections will require six to eight minutes. With the hand pump, this is reduced to two to three minutes. Once the pump is primed, suction and discharge check valves (one-way flow valves) prevent the water from running back down to the water source when the pump is stopped. If these seal tightly, the pump will only require initial priming. Raw water pump discharge pressure delivers raw water to the cyclone separators where the water is swirled at a high rate of speed so that the heavier dirt and sand are thrown to the outside of the swirl and drip to the bottom where they are carried away through waste hoses. Any suspended solid which will settle in a glass in less than 20 minutes will be removed. Water which passes through the separators is delivered under pressure up to the ROWPU van where suction of a booster pump inside the van feeds pressurized water to the filtration components (Figure C-7, page C-10).

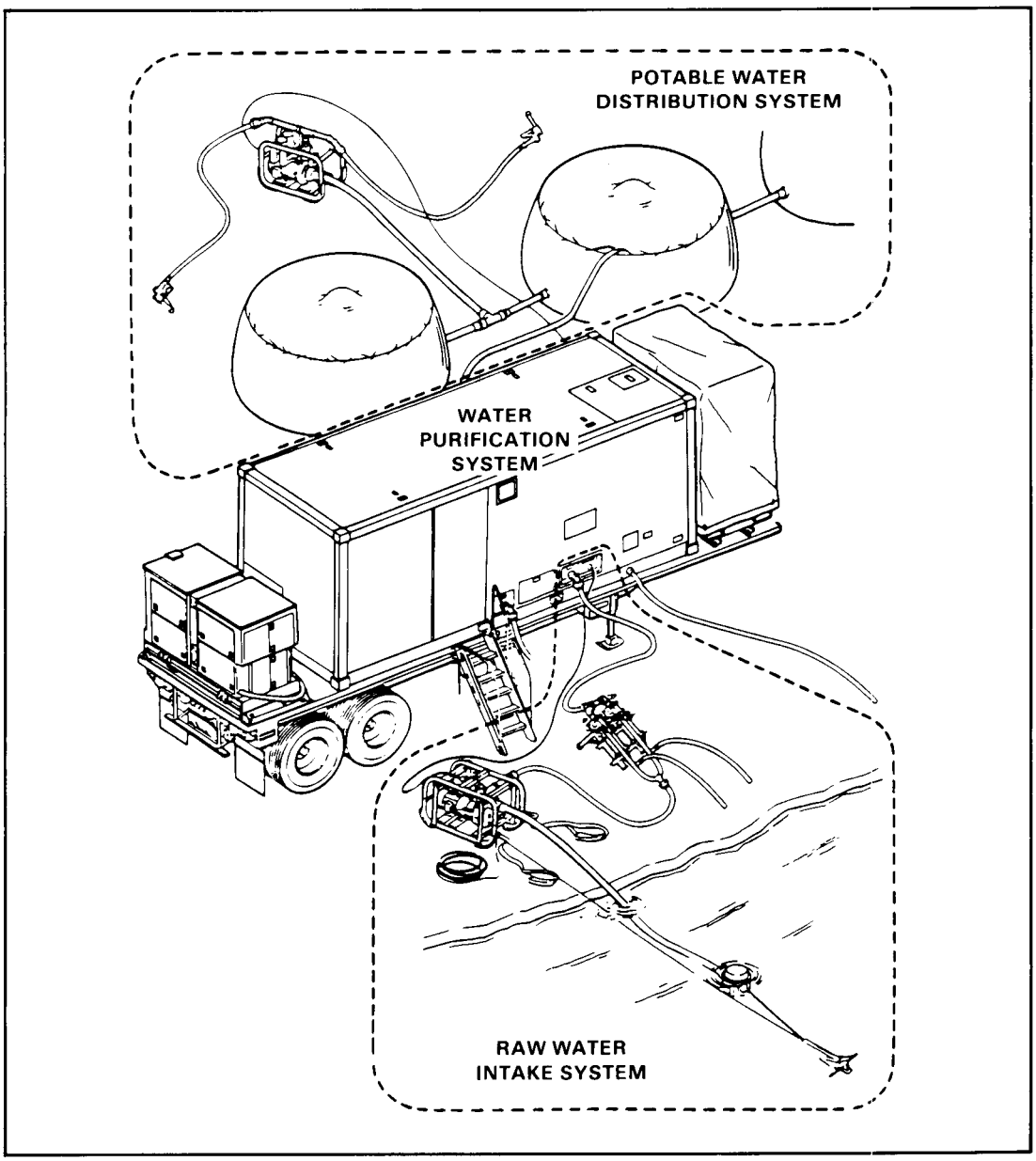

Figure C-5. 3,000-GPH ROWPU system

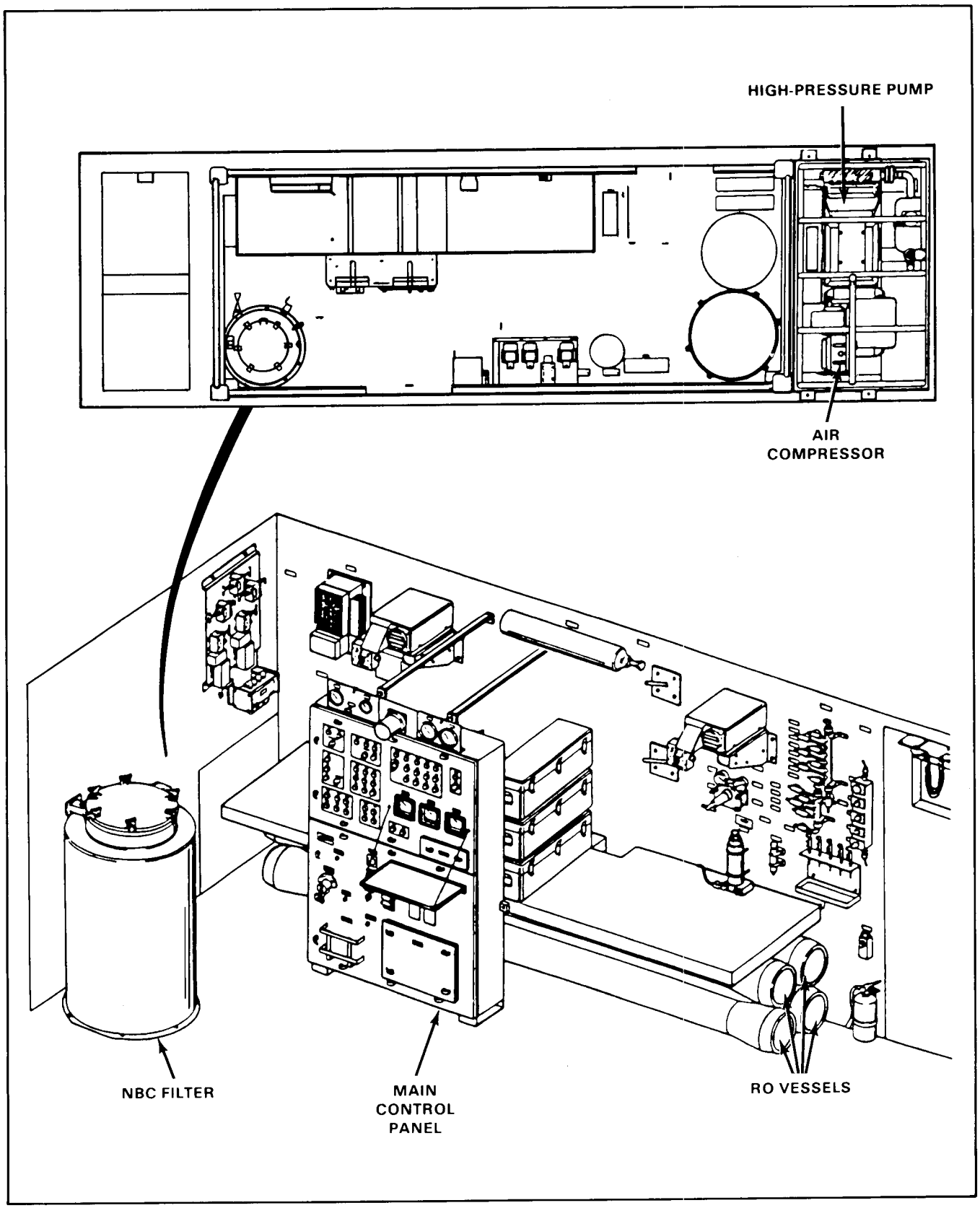

Figure C-6. 3,000-GPH ROWPU (Inside View)

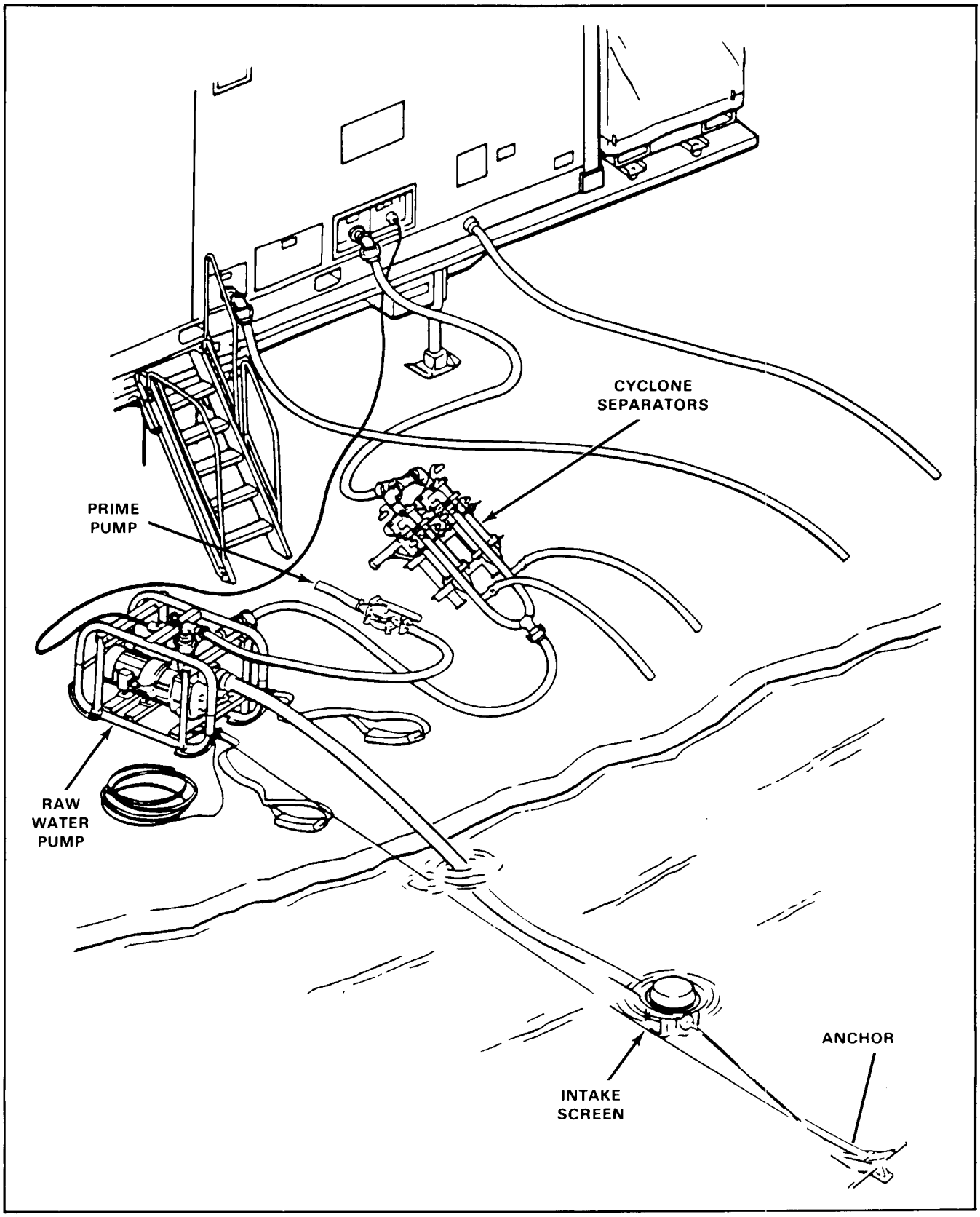

Figure C-7. Raw water system

Water Filtration System

In the water purification system, the raw water is filtered, treated with chemicals, and pressurized for the RO process. This system also includes air supply for automatic valve control.

The raw water is first treated by filtration. The filters reduce the turbidity of the raw water by removing suspended particles of fine clay, dirt, and organic matter. Turbidity not only makes water unfit to drink, but it may also foul the RO elements. Usually the water leaving the cartridge filter will have a turbidity of 0.5 to 1.5 NTU. This amount of turbidity usually causes slow fouling which can be removed by routine RO element cleaning. Fouling reduces the amount of water which can be produced by the ROWPU. The flow path is from the booster pump to the basket strainer, to the media filter, to the cartridge filter. This flow is described below.

The booster pump receives water from the raw water discharge hose. It pressurizes the water so it can go through the filtration steps.

The basket strainer removes remaining large particles such as leaves and wood pieces not removed by the cyclone separators. This prevents plugging of the water distributors inside the media filter. A spare strainer basket is carried on board to provide for a quick change when the basket strainer becomes blocked. When the basket strainer becomes blocked, the pressure at the basket strainer outlet becomes lower than the pressure at the basket strainer inlet. The ROWPU controls sense that pressure drop and set off a yellow warning light and pulsing horn.

The media filter removes most of the fine dirt, clay, and organic particles. The water enters the top of the filter and flows downward through one layer of coarse filter media and a final layer of very fine garnet sand. These layers are all supported by three layers of support gravel. A collector picks up the filtered water for discharge. The fine particles are too small to be removed by the straining action of the filter media. Many of the particles contain layers of electrical charges which prevent them from forming larger particles. The secret to removing these particles is the addition to the feedwater of a treatment chemical called polyelectrolyte. With the aid of this chemical, the filter can remove most of the dirt from the water, resulting in a turbidity between 0.5 and 2 NTU in most cases. Turbidity is measured by a continuous-reading turbidity meter. In time, the dirt trapped in the media filter will cause an increase in the pressure drop between the inlet and outlet pressure. A pressure gauge reads this difference and the ROWPU controls sense when this difference is too great. A warning light on the main control panel will come on and the warning horn will sound. The controls are then set by the operator to automatically backwash the media filter.

The cartridge filter contains 10 filter cartridges. Water goes through these filters for final (polishing) filtrations. When it has gone through this filter, the water will normally have a turbidity of 0.5 to 1.5 NTU. In time, these cartridges will become dirty. The pressure drop across the filter will increase. A pressure gauge reads this pressure drop, and the ROWPU controls sense when it is too high. A warning light will come on and the pulsing horn will sound. The ROWPU must be shut down and the dirty cartridges replaced.

RO System

After filtration to remove most of the suspended clay, dirt, and organic particles, the feedwater is further processed by RO. The feedwater is pressurized by a high-pressure pump and delivered to RO vessels containing RO elements. In the RO elements, the feedwater flows across sheets of membrane material. Some of the water passes through the membrane sheets and is collected to become product water. Most of the dissolved solids (salts) are blocked from passing through. Only one-third to one-half of the feedwater passes through the membrane sheets to become product water. The rest of the water containing most of the salt continues flowing past the membranes and exits the RO vessel as waste water. The amount of product water produced increases as the pressure increases.

The high-pressure pump is a three-plunger, positive displacement pump. It pumps 101 GPM pressurizing the water to the RO vessels. The pump is belt-driven by a 60 HP motor. Pump speed and delivery are fixed. The pump is mounted in a package separate from the IS0 container. Restriction of the water supply (blocked intake flow) will cause extreme vibration of the pump, and a low-pressure switch will automatically shut down the ROWPU.

The pressurized feedwater is discharged through a high-pressure hose to a manifold connecting the top two RO vessels. One-half of the flow enters each vessel; and as it passes across the membrane sheets, some of the water passes through and is collected in a central product water tube. The remaining feedwater, now containing a higher concentration of dissolved solids, discharges through an end fitting into a high-pressure pipe which directs the water back to the inlet end of the corresponding lower RO vessel. The water similarly passes across the membrane sheets within the lower vessels, producing additional product water.

The remaining feedwater leaving the bottom RO vessels is now waste water and contains concentrated salts. From each vessel it passes through an orifice to decrease the pressure. Then it is combined to pass through the high-pressure control valve and another orifice. This valve controls the working pressure of the system. By controlling the pressure of the system, the valve controls the amount of product water made. A high-pressure switch limits the pressure to 900 psig.

The product water flow at a fixed operating pressure is reduced as the source water TDS increases. The increased TDS causes an increase in natural opposing pressure called osmotic pressure. For this reason, the mission normal water production is the highest for fresh water, lower for brackish water, and lowest for sea water. The mission normal water production depends on water temperature. At a fixed operating pressure, the water production is also reduced as the source water temperature decreases.

The product water from each vessel is collected in a header and piped to the outlet. An in-line TDS meter monitors salt content to assure that product water meets potable water standards. A portable TDS meter is also used to measure the TDS from each vessel and the combined TDS from sample valves. Below 100 ppm TDS, use the portable meter. Just before the outlet, calcium hypochlorite is added. The chlorinated product water is capped potable water. When the TDS meets potable water standards, the product water hose is manually inserted into a storage tank. When the product water does not meet potable water standards, the hose is directed to waste. A pressure switch shuts down the ROWPU if hose blockage causes high pressure.

Chemical Feed System

There are three chemical injection pumps: one for polyelectrolyte, one for sequestrant, and one for hypochlorite. Each pump can be adjusted to control its delivery or turned off. Each of the three chemical solutions are contained in a tank. Each tank is labeled by name and a corresponding identifying symbol: polyelectrolyte - triangle; sequestrant - square; hypochlorite - circle. The tanks are manually filled with potable water from the utility hose. The polyelectrolyte and sequestrant are each supplied in a l-gallon container with a graduated dispensing neck to allow for proper addition to the chemical tanks. Hypochlorite is added by emptying premeasured packages.

Polyelectrolyte is pumped from the polyelectrolyte tank by the polyelectrolyte pump. It is injected under pressure into the feedwater at the feedwater booster pump inlet. The polymer acts to trap very fine dirt particles in the media filter. These particles normally will not form larger particles because of electrical charges within their structures. The polymer is a long, string-like molecule which also has electrical charges along its length. As a polymer string contacts the fine particles, the electrical charges hold them and larger sticky floe particles are formed. When a floe particle contacts a grain of filter media, it has a good chance of sticking. Some polymer strings will stick to media grains and then trap fine dirt particles as they pass through the media filter. The amount of polymer used is very important. If there is not enough polymer, too many fine particles escape. If there is too much polymer, the electrical charges interfere with each other and many of the fine particles and some polymer escape from the filter. Use the correct amount of polymer to get the best removal of fine particles, as indicated by the lowest turbidity obtainable.

Inject sequestrant (scale inhibitor) into the feedwater to minimize or avoid the formation of scale in the RO elements. The amount, and whether it is needed at all, depends on the raw water source. Scale is formed when some of the dissolved solids become too concentrated to remain dissolved. The sequestrant interferes with scale formation. If scale forms, acid cleaning is required. Within the sequestrant, bacteria can

grow and foul the RO elements. This is avoided by adding bisulfite when the sequestrant is mixed with the water.

Hypochlorite is injected by the backwash hypochlorite pump to the water flow during media filter backwash. It acts to kill algae and bacteria which can form a sticky matte on top of the filter media. If hypochlorite is not used, algae will make the media in the media filter so sticky that backwashing will not remove the dirt and algae and mud balling will occur. The tank and chemical packets are marked with a circle for easy identification. Hypochlorite is injected by the hypochlorite injection pump into the product water to provide chlorine residual amounts needed to keep the water safe to drink during distribution and use. The amount of chlorine is important and is set by the Army Surgeon General. Ten ppm is required in winter and 5 ppm in summer. Chlorine works slower in cold weather, so more is needed.

Air Control System

The air compressor, mounted in the high-pressure pump package, is the source of air pressure to operate automatic valves and aid in media filter backwash. Compressed air is stored in the air reservoir which provides 1,800 psig service air. An air regulator valve reduces the air pressure to 85 psig for service use. An air dryer further reduces moisture from the low-pressure air used for valves and instruments. Air manifolds distribute the service air.

THE MEDIA FILTER BACKWASH

Backwash the media filter whenever the Media Filter Plugged warning light and horn come on or at least once a day if the horn and light do not come on. Routinely backwash the media filter every six hours when it is operating on a river or lake with a heavy concentration of organic material and a temperature over 70° F. This action avoids a thick layer of sticky organic material building on the surface of the filter bed. This material is the principle cause of mud ball formation. The filter media and the sticky organic material form large sticky balls during backwash. These balls sink and lead to extremely poor filter performance. On some waters, most of the places in the filter bed for the dirt to stick are used up without causing a high enough pressure drop to set off the alarm. When this happens, the filtered water turbidity begins to increase. If it increases by more than 0.5 NTU, backwash the filter.

RO MEMBRANE FOULING

Suspended solids in the feedwater are driven to the membrane surface and have a tendency to stick. As this happens, the water flow through the membrane is restricted. The product flow decreases or the operating pressure must be increased to obtain a constant flow. This problem is called fouling. The lower the turbidity obtained from the filters, the lower the rate of fouling will be. Fouling cannot be avoided, but it can be decreased by good operations. Regular cleaning of the RO elements is part of the operational procedures for the ROWPU.

NBC OPERATIONS

The ROWPU can decontaminate raw water which contains NBC agents. The feedwater filters and the RO elements remove most of these agents. However, safe levels are not assured. When decontaminating raw water during NBC missions, the product water is additionally passed through the NBC filter for final agent removal. After filtration, the water is chlorinated. The NBC filter is connected by jumper hoses when it is required. The top half of the filter contains a layer of activated carbon. The lower half contains a layer of ion exchange resin beads. The NBC agents are absorbed by these materials. The carbon and resin beads are replaced after each 100 hours of water production to assure there is always a capability to absorb NBC materials.

Section III

150,000-GPD ROWPU

CHARACTERISTICS AND FEATURES

The 150,000-GPD ROWPU is intended for use by corps and EAC water purification units to support operations requiring GS water supply operations. The unit will be provided to operating units as

required. Production capability is based upon a 20-hour-per-day operation. The unit is mobile when disassembled. Required assembly time will be less than three days. The unit is designed to operate on seawater, and is not specially designed to reduce the presence of chemical and biological agents and radioactive by-products; however, 90 to 95 percent reduction in NBC agent concentration is inherent in its operation. The process, however, does not ensure potable water in an active NBC environment. The ROWPU (Figure C-8, page C-15) consists of a series of diesel engine-driven pumps, filters, and a RO block assembly capable of converting 150,000 GPD of brackish water or seawater to drinking water.

MAJOR COMPONENTS

The raw water pump assembly, boost pump assembly, pretreatment assembly, multimedia filters, high-pressure pump assembly, and the RO block assembly are major components of the 150,000-GPH ROWPU. These components are described below.

Raw Water Pump Assembly

The raw water pump assembly consists of a skid-mounted diesel engine/centrifugal pump combination. The one-cylinder diesel engine is rated at 6.7 HP at 2,000 RPM. Start the engine by a hand crank or with an electric starter. The centrifugal, direct-coupled pump is rated at 350 GPM at 30 psi. The pump takes water from a remote location up to 95 feet away and pumps it to the boost pump assembly up to 500 feet away. The dimensions of the assembly are 49 by 33 by 29 inches, its weight is 687 pounds, its oil capacity is 2.3 quarts, and its fuel tank capacity is 2 gallons.

NOTE: In recent deployments, this pump has been replaced by the three-cylinder 350-GPM pump described in Appendix D of this manual.

Boost Pump Assembly

The boost pump assembly consists of a skid-mounted diesel engine/centrifugal pump combination. The three-cylinder diesel engine is rated at 48 HP at 3,000 RPM. An electric starter starts the engine and drives the pump through a belt. The centrifugal pump is rated at 350 GPM at 115 psi. This pump provides the pressure to maintain feedwater flow to the pretreatment assembly, through the multimedia filters, back through the pretreatment assembly, and to the high-pressure pump assembly. The dimensions of the assembly are 69 by 40 by 37 inches, its weight is 1,500 pounds, its oil capacity is 8.1 quarts, and its fuel tank capacity is 15 gallons.

Pretreatment Assembly

The pretreatment assembly consists of a skid-mounted gauge panel, two chemical metering pumps, interconnecting piping, valves, and cartridge filters. A manually adjustable chemical metering pump doses the feedwater with a coagulant aid as it enters the pretreatment assembly. The chemical metering pumps are electric-driven, piston diaphragm types rated at. 7 GPH at 145 psi. The feedwater then goes to the multimedia filter where, with the aid of the coagulant, most particles are removed. It returns to the pretreatment assembly where it is dosed with a scale inhibitor by the second manually adjustable chemical metering pump. The scale inhibitor reduces the formation of scale and fouling of the RO membranes. The feedwater continues on to the cartridge filter where the remaining fine particles are removed. The dimensions of the assembly are 111 by 38 by 71 inches, and it weighs 1,518 pounds.

Multimedia Filters

The multimedia filters consist of three identical skid-mounted filters with lifting eyes. The pretreatment assembly receives water at the top of the filter where it flows downward through the media and returns from the bottom of the filter to the pretreatment assembly. Each multimedia filter is 56 by 48 by 82 inches and weighs 5,052 pounds dry and 9,217 pounds wet.

High-Pressure Pump Assembly

The high-pressure pump assembly consists of a skid-mounted diesel engine/jet pump combination. The high-pressure pump diesel engine is a six-cylinder diesel rated at 325 HP at 1,800 RPM. The pump, a roto-jet driven by the diesel engine through a series of matched V-belts, is rated at 350 GPM at 805 psi. The high-pressure pump assembly raises the feed water from the pretreatment assembly to the pressures needed to operate the RO block. The dimension of the assembly is 101 by 75 by 82 inches, its weight is 5,760 pounds, its fuel tank capacity is 25 gallons, its oil capacity is 9 gallons, and its coolant capacity is 9 gallons.

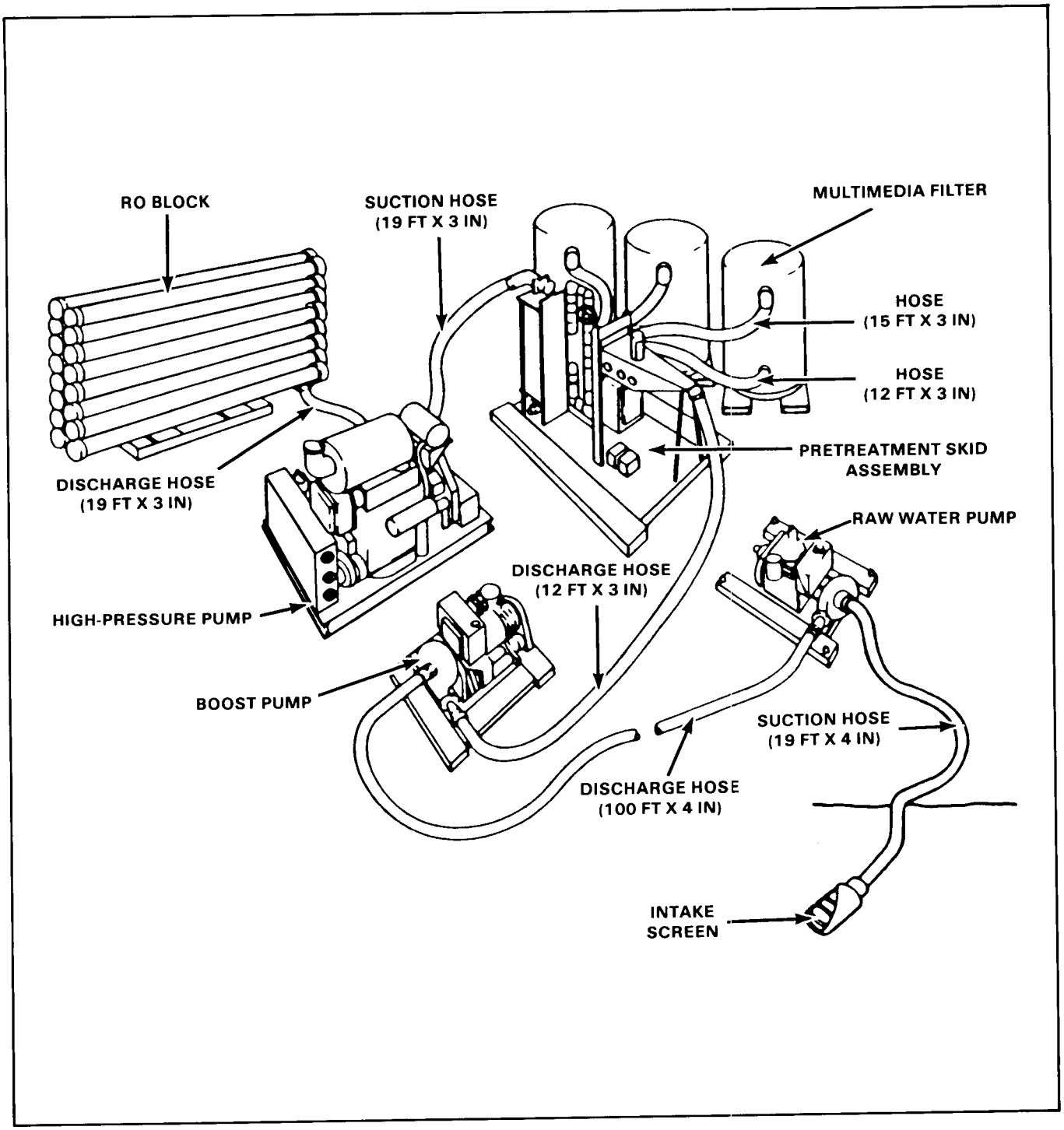

Figure C-8. 150,000-GPD ROWPU

RO Block Assembly

The RO block assembly consists of 16 skid-mounted RO tube assemblies, each of which holds five RO membrane elements. Water coming from the high-pressure pump enters the tubes where the membrane elements separate it into drinking water and brine concentrate. The dimension of the assembly is 53 by 229 by 92 inches, and it weighs 4,000 pounds dry.

APPENDIX D

Storage Equipment Characteristics

Section I

3,000-Gallon Onion Tank

CHARACTERISTICS AND FEATURES

The 3,000-gallon onion tank is a highly mobile, easily transportable, manually inflatable, collapsible fabric water tank. The tank is 23 by 28 by 42 inches and weighs 130 pounds packaged. The tank is 56 by 148 by 94 inches and weighs 24,020 pounds filled with water (Figure D-1, page D-2).

MAJOR COMPONENTS

The 3,000-gallon onion tank consists of 12 major components. They are described below.

Filler Fitting

This fitting provides the means to fill the water tank. Also use this 2-inch female fitting to remove water from the tank. Access it by removing the dust plug which is held in place by two cam-lever arms.

Discharge Fitting

This fitting provides the means of removing water from the tank. Also use this 2-inch male fitting to fill the tank. Access it by removing the dust cap which is held in place by two cam-lever arms.

Automotive Valve

This valve provides an attachment point for a standard, automotive-type pump to inflate the tank collar. Access it by removing the valve cap.

Inflation Valves

There are four inflation valves: three in the tank collar and one in the cover float. The inflation valves provide an attachment point for the foot bellows to inflate the tank collar and cover float. During use, the inflation valve is turned to the Open position for inflating and deflating and to the Close position for holding air after inflation. Positions are stenciled on the tank collar and cover float.

Tank Collar

The tank collar is inflated before filling the tank. This allows the collar and tank to rise with the rising water level.

Cover Float

The inflatable float is an integral part of the cover. The float is inflated prior to installing the cover over the tank and acts to support the cover.

Handle-Toggles

Ten handle-toggles are installed around the outside of the tank. They provide the attachment points for the 10 cover handles used to secure the cover to the tank and to serve as lifting points for moving the empty tank.

Cover

The cover serves a dual purpose. When the tank is in use, install the cover over the top to prevent contamination of the drinking water. When the tank is not in use, the cover serves as the valise. The cover provides 10 handles around the outer edges which attach to the 10 handle-toggles for securing the cover to the tank.

Foot Bellows

The foot bellows provides the means of inflating the tank collar and cover float. The foot bellows provides an integral hose with a male fitting which threads directly into any of the four inflation valves. The foot bellows is stored in the repair pouch, on the outside of the tank.

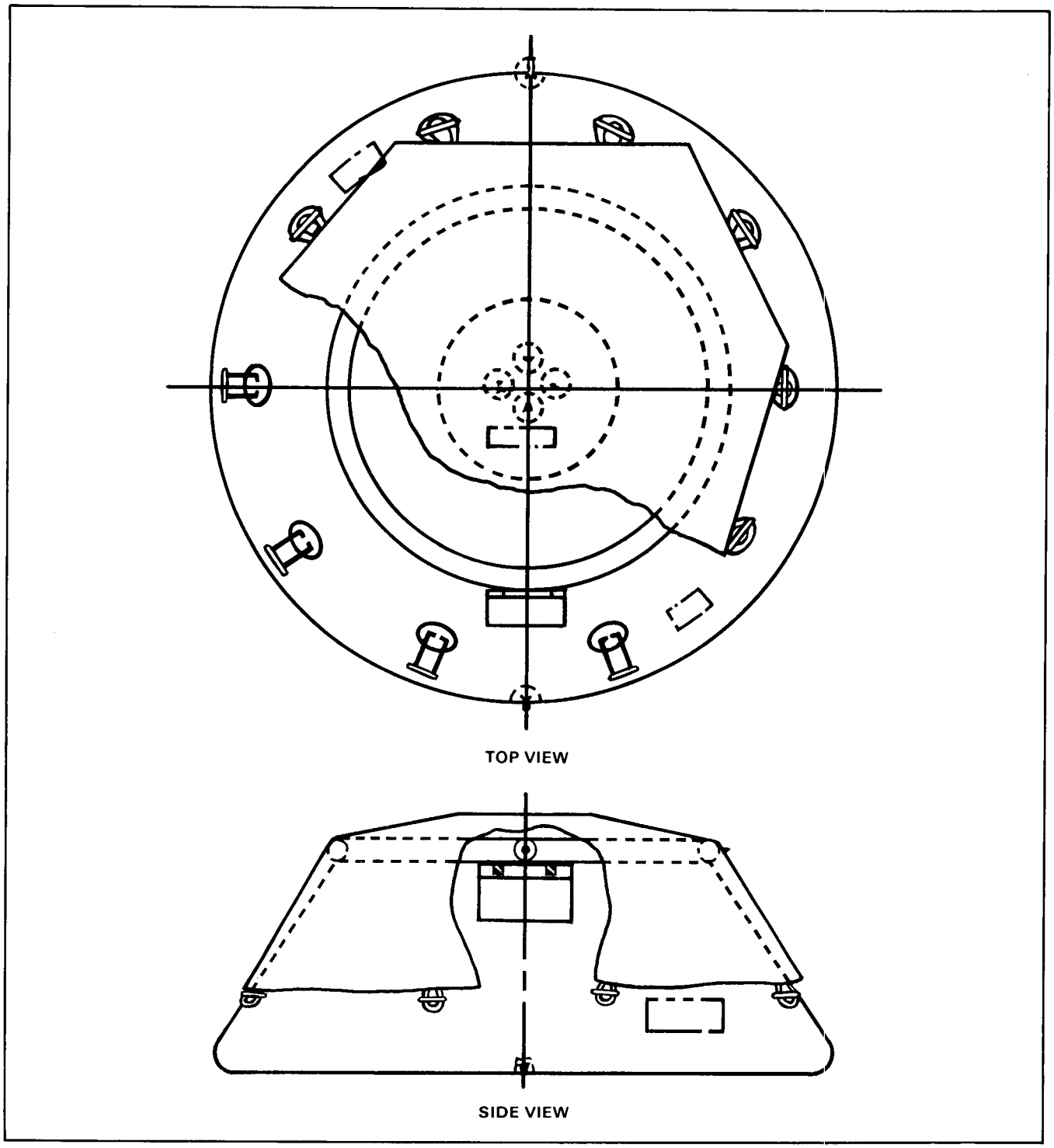

Figure D-1. 3,000-gallon onion tank

Lift Handles

There are two lift handles attached to the inside bottom of the tank. Use the handles for hanging the tank inside out to dry after use.

Repair Pouch

Attach the repair pouch to the outside wall of the tank, and use it to store the hand bellows, repair kit, and TM 5-5430-225-12&P.

Repair Kit

The repair kit contains all the items needed to perform both emergency and permanent repair of cuts and punctures in the tank fabric. Store items of the repair kit in the repair kit pouch. Also included with the repair kit is a laminated instruction sheet detailing fabric repair procedures.

Section H

PWS/DS

THE 40,000-GALLON POTABLE WATER DISTRIBUTION SYSTEM

The PWS/DS is the Army's primary means for the receipt and storage of bulk water and for its issue to combat forces under tactical conditions. This section briefly describes the PWS/DS and its major parts. Chapters 2, 3, and 5 of this manual contain information on site selection, layout, displacement, and operation for this system.

CHARACTERISTICS AND FEATURES

The PWS/DS is intended for use in an arid environment by both DS and GS water units. DS units will be issued the PWS/DS with 20,000-gallon fabric tanks, and GS units will be issued the PWS/DS with 50,000-gallon fabric tanks. The total capacity of each PWS/DS will be dependent on the number and size of fabric tanks assigned and used. Each PWS/DS has the capability of receiving and distributing water to and from both hose line and tank truck. The PWS/DS can issue water to either tank trucks (SMFT), water buffaloes, FAWPSS, or small unit containers, such as 5-gallon cans. When working with this equipment, it is important to remember that the systems are based on a modular concept: that is, any number of tanks may be used on an individual basis, and other tanks may be shut off at either their input or output valves. Likewise, if a section of 20-foot hose is specified for use in a particular application but the hose is found to have a hole or a leak, take two 10-foot lengths from the overpack kit, couple together, and use in its place.

MAJOR COMPONENTS

Pumps, connection kits, loading stations, hypochlorinators, and a collapsible fabric tank are major components of the PWS/DS. They are described in the following paragraphs.

Pumps

Both the 125- and 350-GPM pumps are used in the system. The 350-GPM pump and diesel engine are trailer-mounted, the 125-GPM pump and diesel engine are skid-mounted. Use the 350-GPM pump to fill the collapsible fabric bags. Use a 350-GPM pump in parallel with an auxiliary 125-GPM pump to supply potable water from the bags to the water distribution points.

The 126-GPM pump. The 125-GPM pump (Figure D-2, page D-4) is a skid-mounted, self-priming centrifugal type water pump rated at 125 GPM at 50 feet head. It is powered by a one-cylinder, air-cooled diesel rated at 6 HP at 3,600 RPM. The dimensions are 19 by 22 by 26 inches, and it weighs 175 pounds. Fuel is supplied by an internal l-gallon tank. Engine oil capacity is 1.1 quarts.

The 360-GPM pump. The 350-GPM pump (Figure D-3, page D-5) consists of an air-cooled, three-cylinder diesel engine and self-priming centrifugal pump mounted on a two-wheel frame assembly. The pumping assembly incorporates its own control panel and suction and discharge valves. These components are also mounted on the frame assembly. The single stage, centrifugal flow, variable displacement pump is rated at 350 GPM at 250 feet head. It has a working pressure of 125 psi and a suction pressure of 20 psi. The three-cylinder, 172-cubic-inch diesel is rated at 44 HP at 2,500 RPM and weighs 595 pounds. An internal 19-gallon fuel tank supplies fuel to the

diesel. Engine oil capacity is 2 gallons. The dimensions of the unit are 122 b y 78 b y 68 inches, and it weighs 2,140 pounds. Maximum towing speeds are 20 MPH on hard surfaces, 10 MPH on gravel roads, and 8 MPH cross country.

Connection Kits

There are a variety of connection kits with each PWS/DS. Use these kits to connect the 125-GPM and 350-GPM pumps to the receiving or distribution side of the fabric bags of the tank farm. Use 2-inch gate valves, 4-inch gate valves, 4-inch butterfly valves, and 4-inch quick-acting valves to control the flow of water through the PWS\DS. The 4-inch valves control the flow to and through the fabric bags and the 350-GPM pumps. Use these larger valves to isolate the bags or the 350-GPM pump. Use the 2.inch valves to control the flow of water at the distribution points. Suction or discharge hoses are either 4 inches or 2 inches and come in 10- and 20-foot lengths. The 1 1/2-inch discharge hose is 25 feet long.

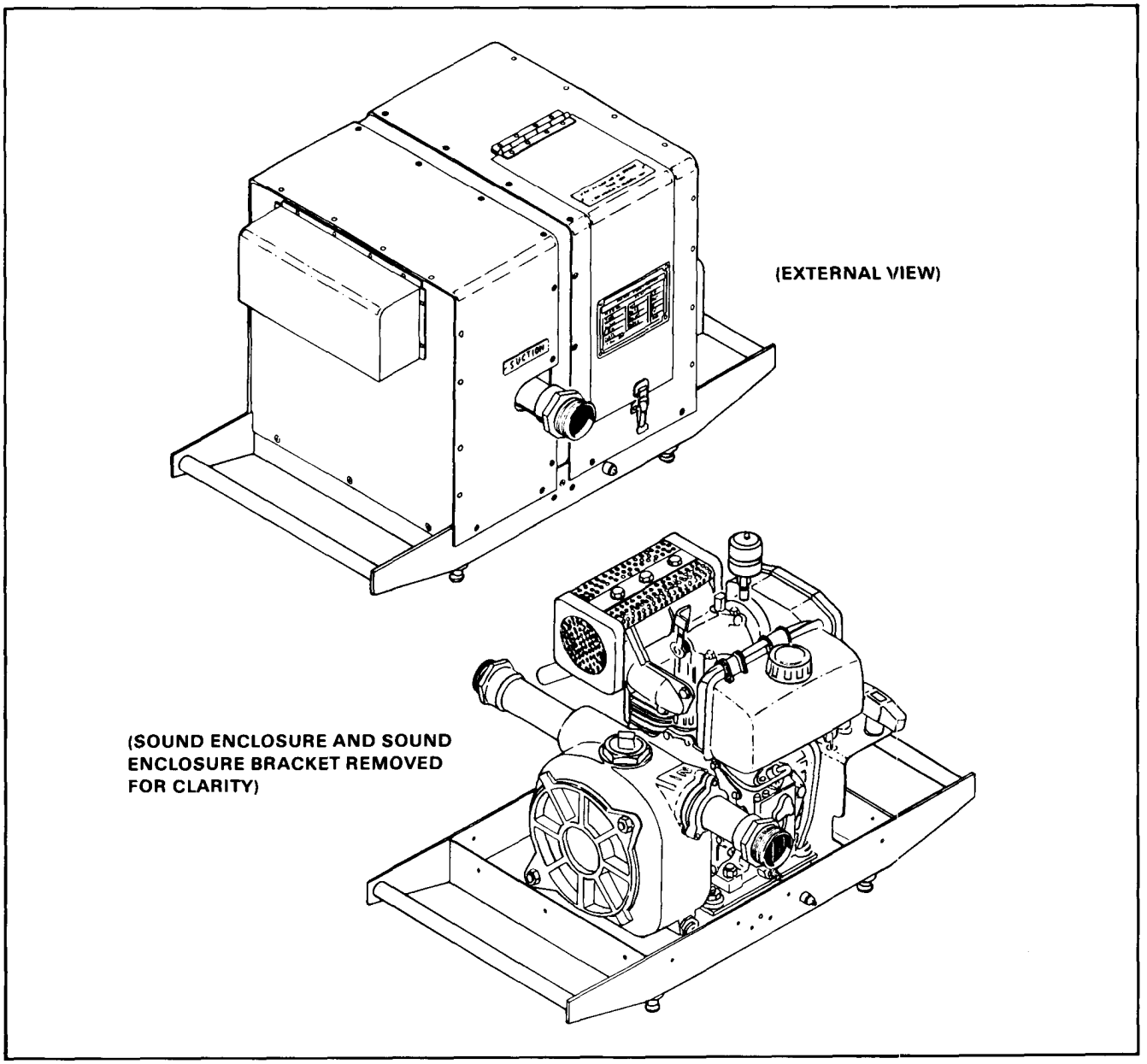

Figure D-2. 125-GPM pump

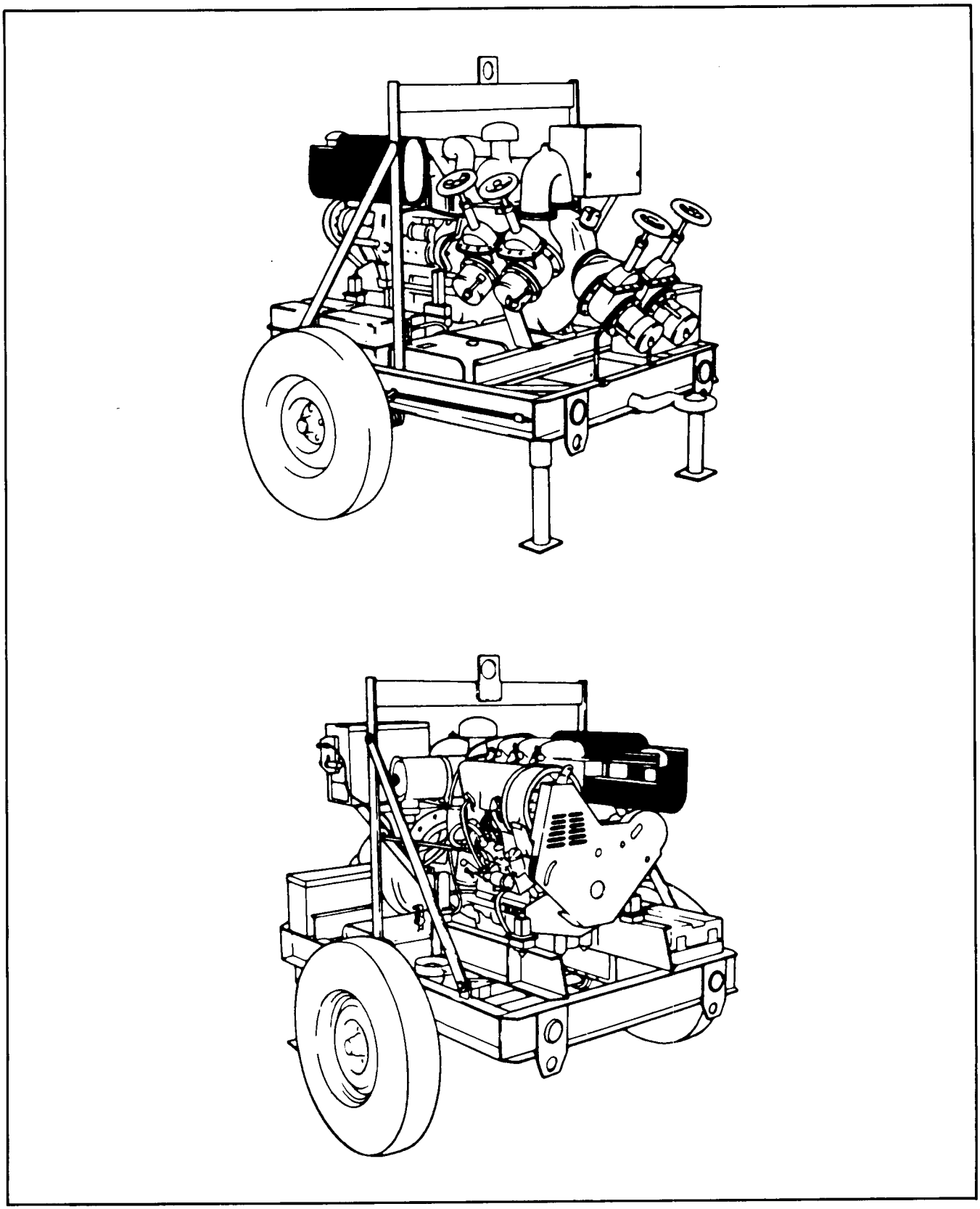

Figure D-3. 350-GPM pump

Loading Stations

Four types of loading stations are provided for dispensing water. Two loading stations are provided to dispense water through 20-foot, 4-inch diameter hoses for filling SMFTs. Use gate valves to control water flow through these hoses. Four loading stations are provided to dispense water through 20-foot, 2-inch diameter hoses for filling water trailers. Use gate valves to control water flow through these hoses. Four water dispensing stations are provided to deliver water through hand-held nozzles, and three drum-filler stations are provided to deliver water to the FAWPSS through a 1 1/2-inch diameter hose.

Hypochlorinator

You need two hypochlorinators to operate the PWS/DS. Place one hypochlorinator unit (Figure D-4, page D-6) in the line between the 350-GPM pump and the water loading stations and the other on the inlet to the tanks. A proportionate amount of water delivered by the pump flows through the hypochlorinator where a solution of liquid chlorine is added to the mainstream flow. Water flowing through the line bypassing the hypochlorinator is metered to maintain the correct flow through the unit. Placed in a water line, the hypochlorinator will chlorinate the water flowing through the line for a minimum of two hours before requiring operator adjustment (resupply of chlorine solution). The portable frame-mounted hypochlorinator uses the mainstream water pressure as its power source. It is 33 by 26 by 28 inches and weighs 235 pounds. The chlorine reservoir solution tank holds 6 gallons of solution.

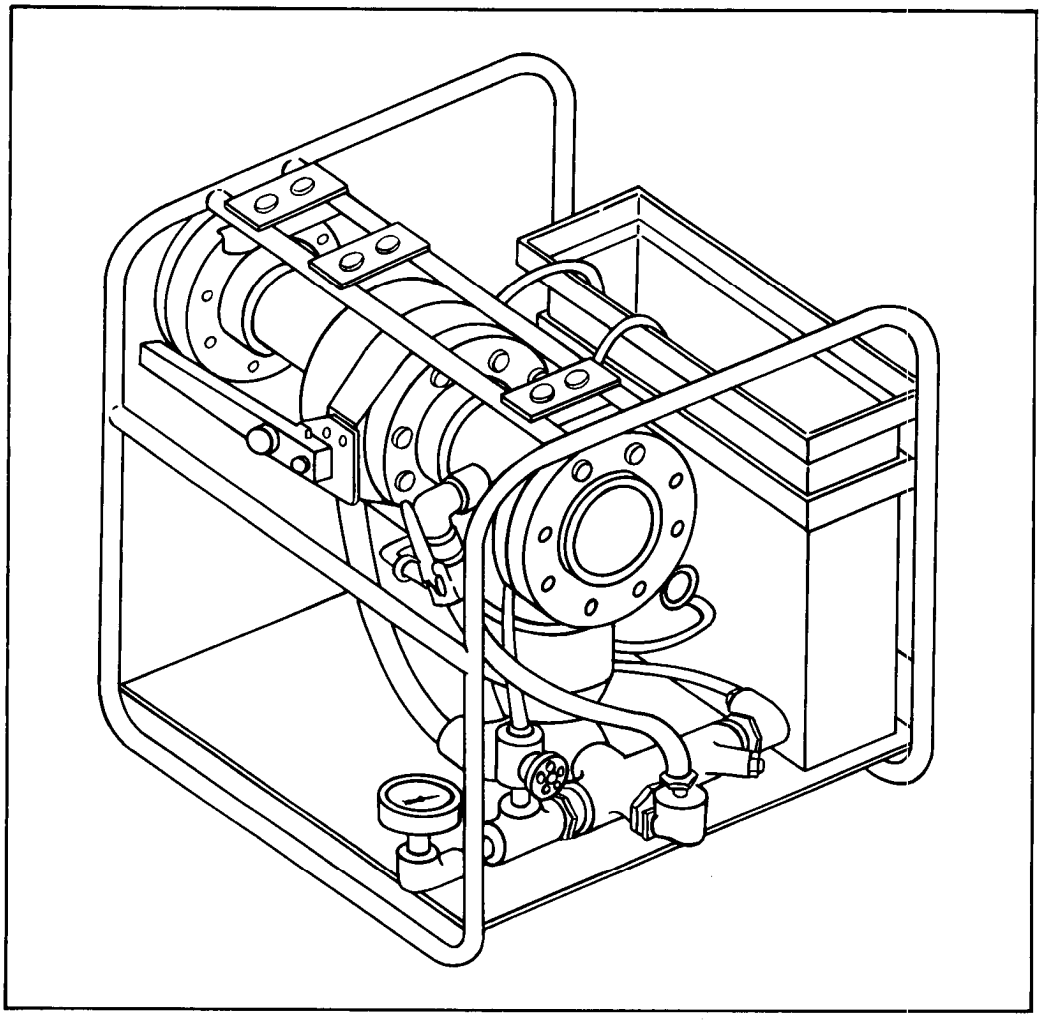

Figure D-4. Hypochlorinator

Collapsible Fabric Tank (20K and 50K)

The water tank stores the potable water. The unit consists of the collapsible tank constructed of one-ply nylon fabric impregnated with chlorobutyl, vent and drain assemblies, and a 1/2-inch drain hose and control valve assembly (Figure D-5, page D-7). When filled, the tank assumes a pillow shape. Do not overfill the tank as it may burst. Do not use the tank on steeply sloping ground or it may roll. The maximum slope of the ground must not exceed 3 inches per 100 feet. Handles are provided along all sides of the tank for moving and positioning while empty. Pump water into the tank at 350 GPM until the tank is 90 percent filled; at that time, reduce the flow to 100 GPM. When not in use, fold the tank or roll and store it in the shipping container. Use a repair kit included with each tank to temporarily seal punctures or tears in the tank while it is full. Use a vulcanized rubber patch to permanently repair the tank when it is removed from service.

The 20,000-gallon tank. The 20K tank is 28 by 24 feet dry and 27 by 23 by 5.5 feet filled; it weighs 460 pounds dry and 166,800 pounds filled.

The 50,000-gallon tank. The 50K tank is 65 by 25 feet dry and 23 by 63 by 5.75 feet filled; it weighs 1,560 pounds dry and 418,560 pounds filled.

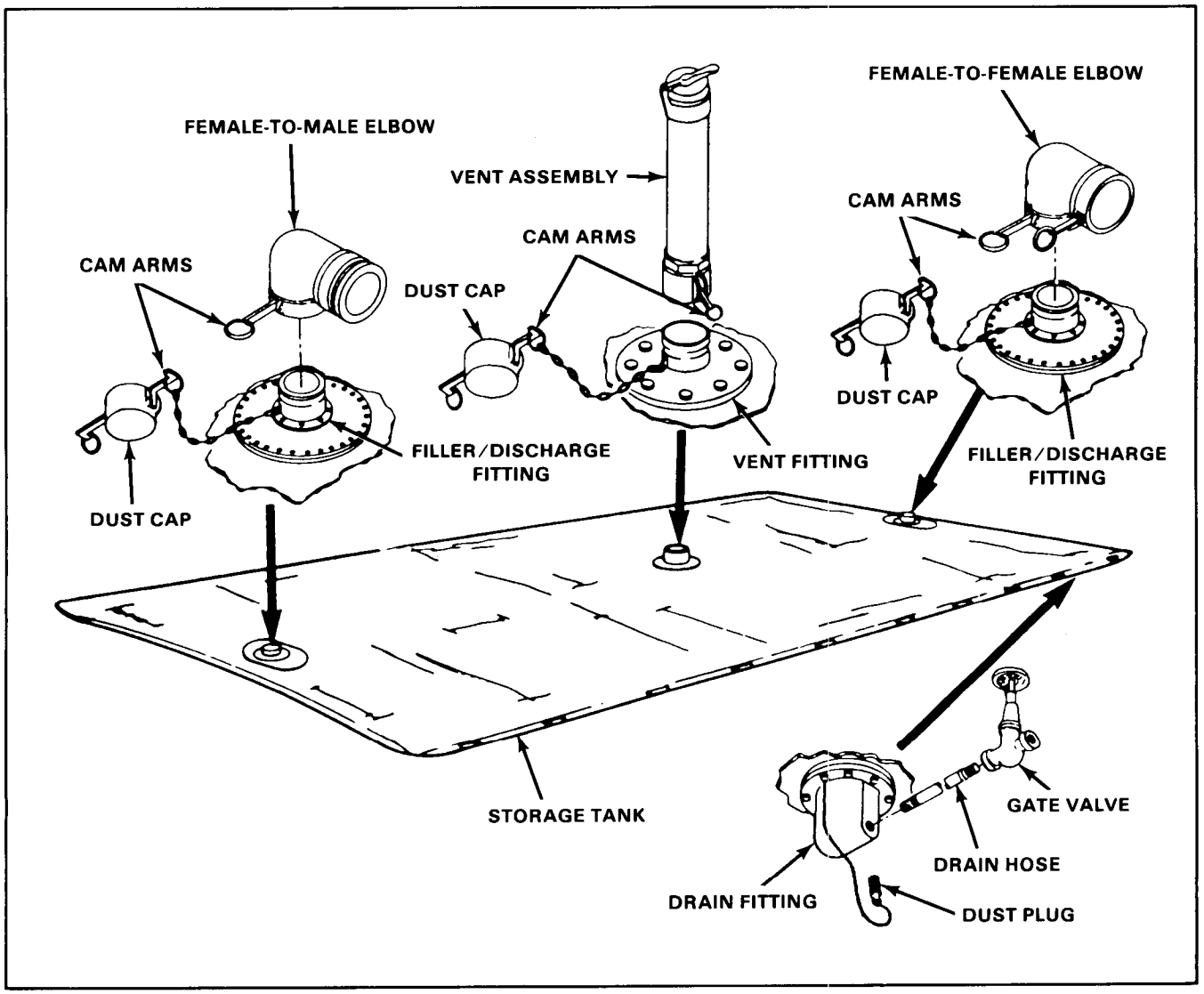

Figure D-5. Collapsible fabric tank and assemblies

APPENDIX E

Distribution Equipment Characteristics

Section I

FAWPSS

CHARACTERISTICS AND FEATURES

The FAWPSS is a portable, self-contained, gas- or diesel-operated unit that dispenses potable drinking water to troop units. The FAWPSS is operated by a 125-GPM centrifugal pump. Attach six 500-gallon water storage and dispensing drums, two at a time. Quick-disconnect couplings connect the drums to the pump. These drums provide water to the 125-GPM pump which, through hoses and valves, pumps water to four distribution nozzles where the water is discharged (Figure E-1, page E-2).

MAJOR COMPONENTS

The 125-GPM pump, 500-gallon water drum, hose, valve, nozzle, and stand assemblies are major components of the FAWPSS. They are described in the following paragraphs.

The 125-GPM Pump

The 125-GPM pump and engine assembly provide power to operate the FAWPSS. The 125-GPM pump is a skid-mounted, self-priming centrifugal type water pump rated at 125 GPM at 50 feet head. It is powered by either a one-cylinder, air-cooled diesel engine rated at 3.8 HP at 3,600 RPM or a one-cylinder, air-cooled gas engine rated at 3 HP at 2,500 RPM. Its dimensions are 32 by 37 by 24 inches, and it weighs 144 pounds. Fuel is supplied by either an internal 1-gallon tank or a 5-gallon gas can with a flexible spout and fuel adapter assembly supplied with the set. Engine oil capacity is .79 quarts.

The 500-Gallon Water Drum

The six 500-gallon water drums are designed for a working pressure of 4 to 5 psi. When filled to its 500-gallon capacity, the drum is round in shape (Figure E-2, page E-3). It can be towed, at speeds not to exceed 10 MPH, for short distances over smooth terrain using the towing and lifting yoke assembly. Two elbow coupler valve assemblies are provided with the 500-gallon water drums for ease of connection to the FAWPSS. Each drum is 7 by 4 feet; weighs 275 pounds empty, uncrated; and weighs 365 pounds crated. Crated size is 75 by 33 by 22 inches. The drum weighs over 4,500 pounds full.

- Towing and lifting yoke. Attach a towing and lifting yoke to the ends of the 500-gallon water drum for use in towing and lifting the drum.
- Tie-down kit. Use a tie-down kit to secure drums when they are being transported by cargo truck.
- Repair kits. The repair kits are furnished for emergency use only to prevent leakage until the operator can empty the drums. When these kits are used to make emergency repairs, do not move, tow, lift, or transport the drum until it is completely empty.

Hose, Valve, Nozzle, and Stand Assemblies

Two 2-inch valve assemblies provide for control of water during installation, operation, and disassembly of the FAWPSS. Various quick-disconnect, cam-locking hose assemblies are supplied with the FAWPSS. The quick-disconnect connectors provide for ease of assembly, disassembly, and maintenance. Each hose assembly is equipped with a protective cap on the male end and a protective plug on the female ale end to prevent contamination when not in use. Four nozzle assemblies are supplied with the system for dispensing water. Each nozzle assembly is equipped with a quick-disconnect connector and swivel for ease of operation. Two stand assemblies are supplied on which to place the nozzle assemblies when not in use.

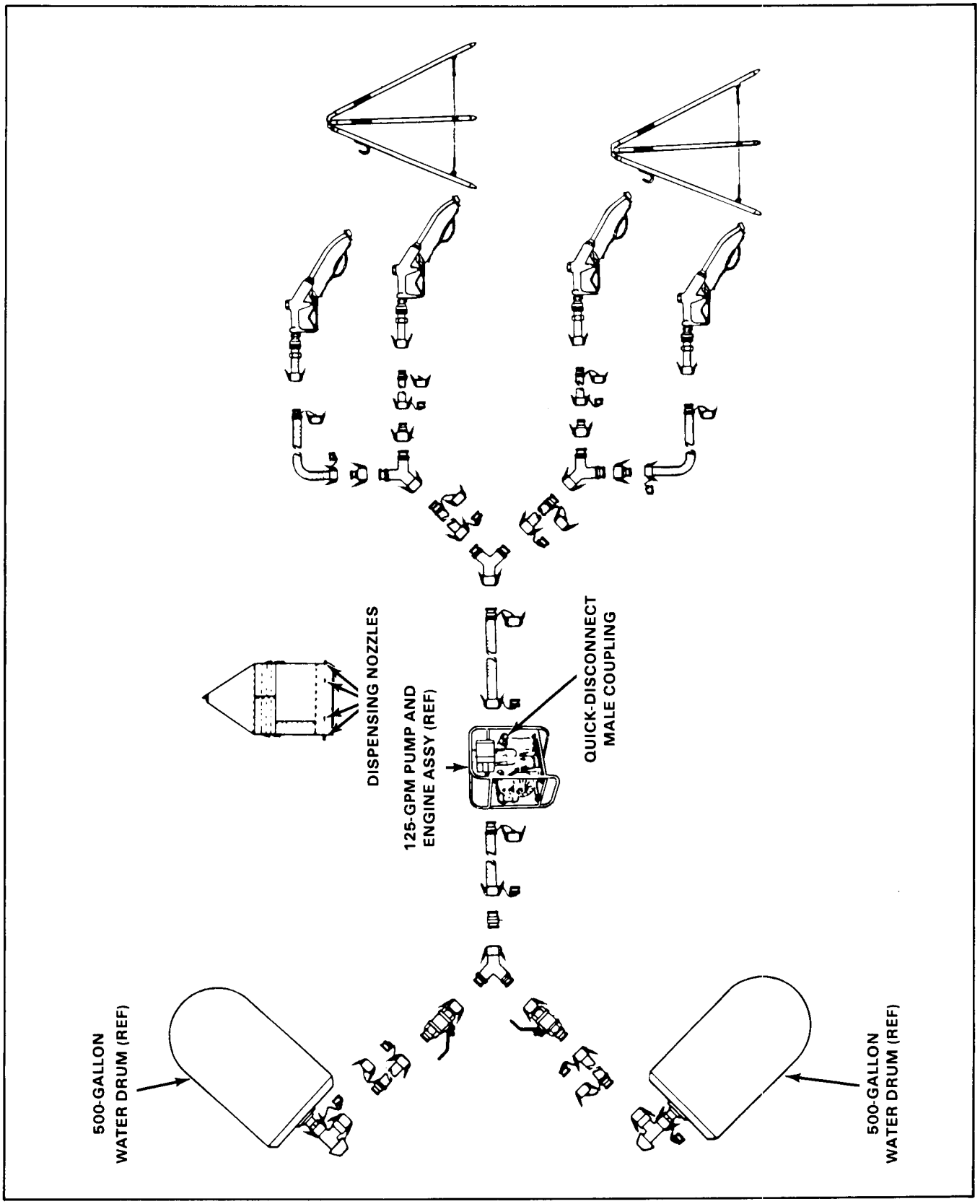

Figure E-1. FAWPSS

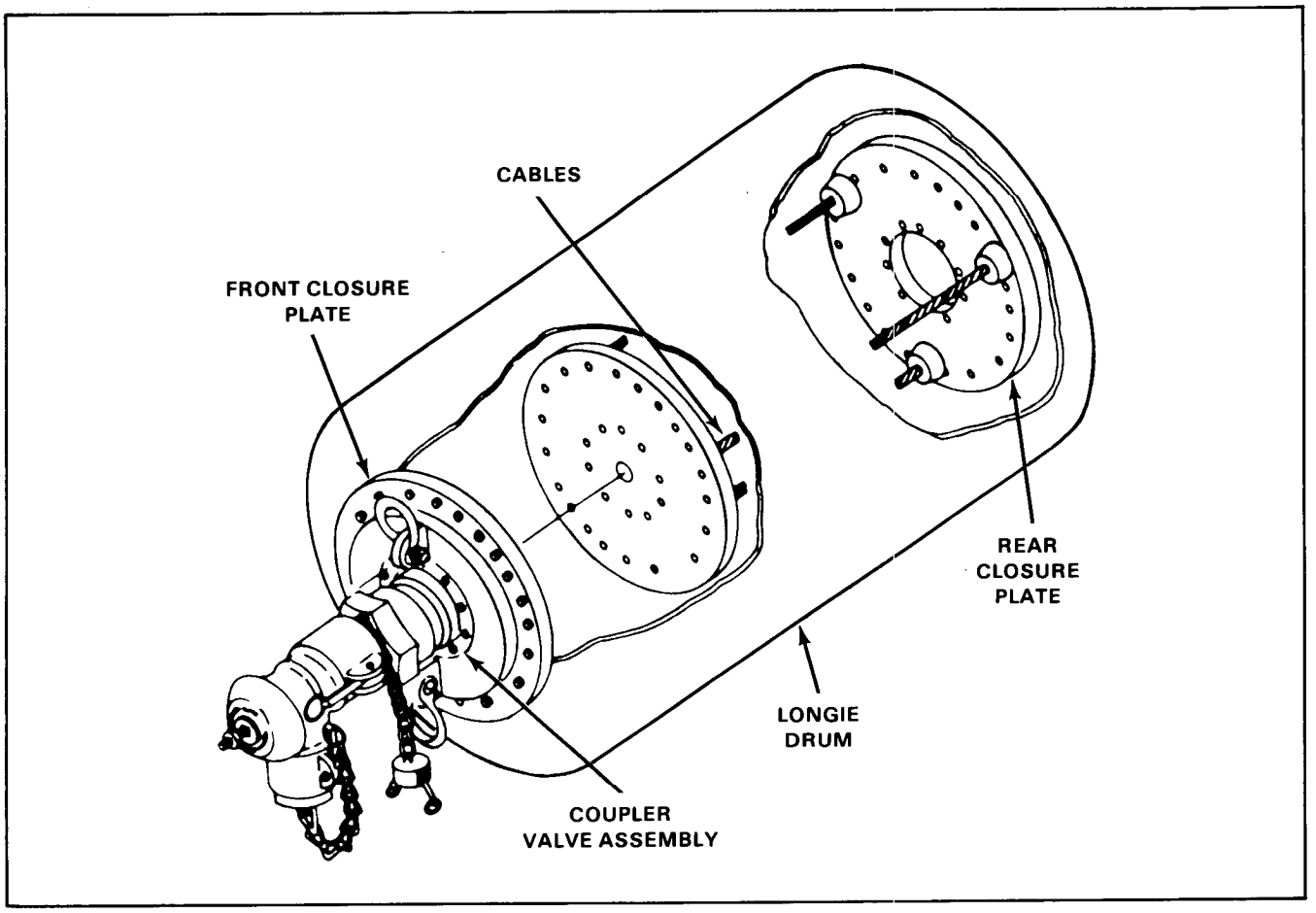

Figure E-2. 500-gallon drum

Section II

SMFT

CHARACTERISTICS AND FEATURES

These tanks are designed and intended for transport of drinking water only. The assembled unit consists of a collapsible tank with pressure gauge, end fittings, tie-down straps, emergency repair items, hose, and tools to secure the tank safely on the trailer. The transport or contact with POL products will contaminate the tanks and result in permanent damage to the material and possible structural failure. These tanks can only be transported full or empty. A partially-filled tank will result in the lading shifting (surge) and will result in loss of vehicle control and possible rupture of the tank wall. When completely empty, roll up and store the tank. The tank is designed to be drained by gravity or suction pump only. Use of air pressure to unload the tank is not acceptable as it may cause the tank to burst under pressure.

DS water supply units use the 3,000-gallon SMFTs (Figure E-3, page E-4) to deliver water to major users that have no organic transportation capable of receiving needed water supplies directly from the water points. Additionally, transportation medium truck companies use these tanks during arid deployments for line haul of potable water from corps GS PWS/DSs to the division and brigade support area's PWS/DSs. These tanks are transported on M-871 22-ton semitrailers.

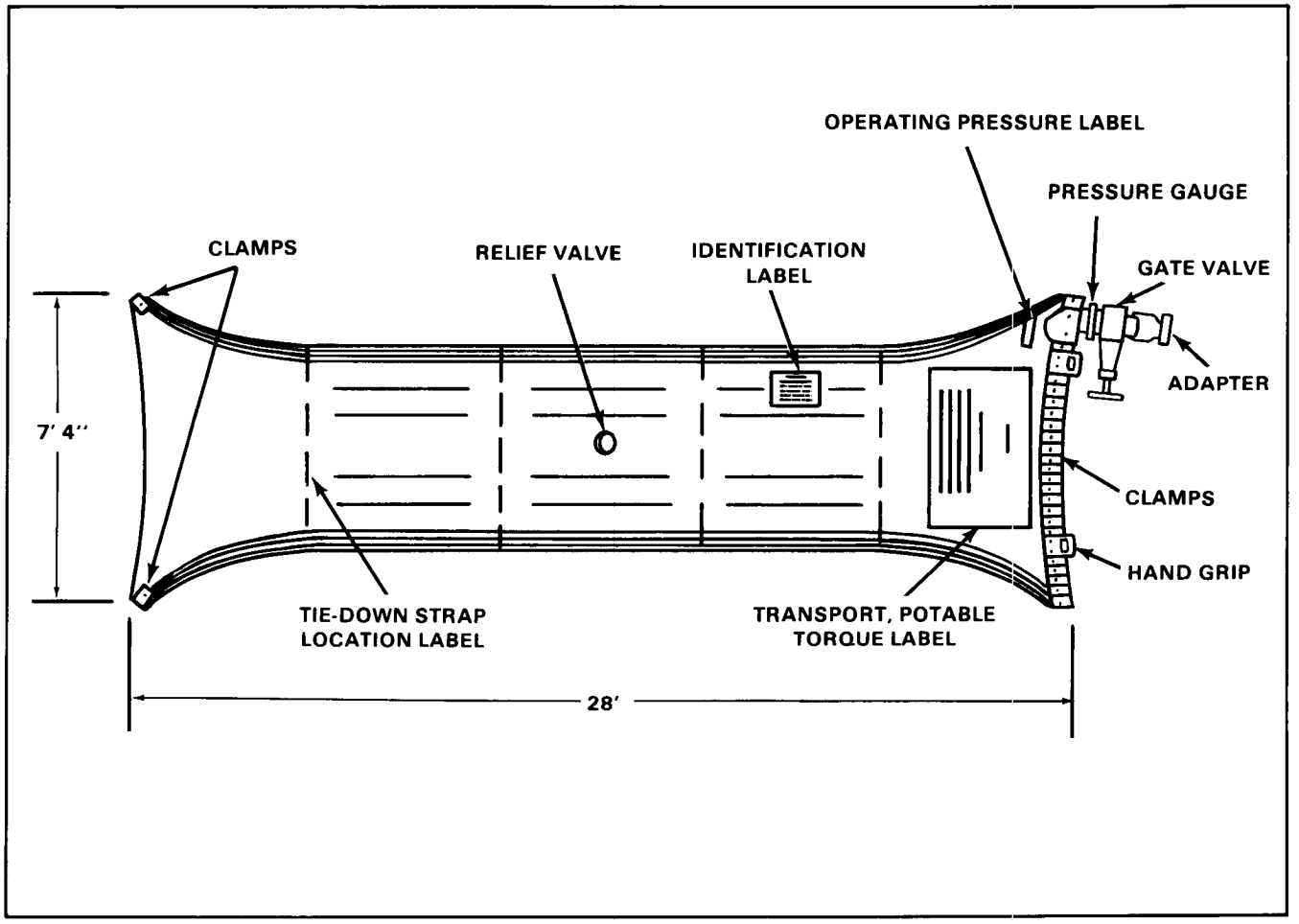

Figure E-3. 3,000-gallon SMFT

Medium truck companies use the 5,000-gallon SMFTs (Figure E-4, page E-5) for line haul of potable water to and from TA and/or corps GS PWS/DSs, as well as some local haul to corps and EAC users that have no organic transportation capability. These tanks are transported on M-872 34-ton semitrailers.

MAJOR COMPONENTS

The 3,000-gallon and 5,000-gallon collapsible tanks are major components of the SMFT. They are described below.

Collapsible Tank, 3,000-Gallon

The tank is constructed of a chlorobutyl liner, a rubber-coated, multi-ply carcass, and an exterior weather, abrasion-resistant tread stock. When laid flat, the tank is 28 feet long, 7 feet 4 inches wide, and 4 inches high. When filled, it assumes a pillow-like shape approximately 27 feet long, 5 feet 2 inches wide, and 4 feet 6 inches high. Access to the tank interior is provided through the use of end clamps which you may remove. Handles are provided to facilitate positioning of the tank while empty.

- Fittings. The tank is furnished with a 4-inch filler/discharge assembly consisting of a male quick-disconnect, a 4-inch gate valve, a pressure gauge, two 10-foot lengths of 4-inch hose, and a manually operated relief valve located in the top center of the tank.
- Tie-down assembly. The tie-down assembly consists of four belts with eight ratchet take-up mechanisms and trailer attachments specifically designed to minimize tank movement during transport.
- Emergency repair kit. The emergency repair kit includes temporary repair items, such as plugs and clamps, to affect repair.

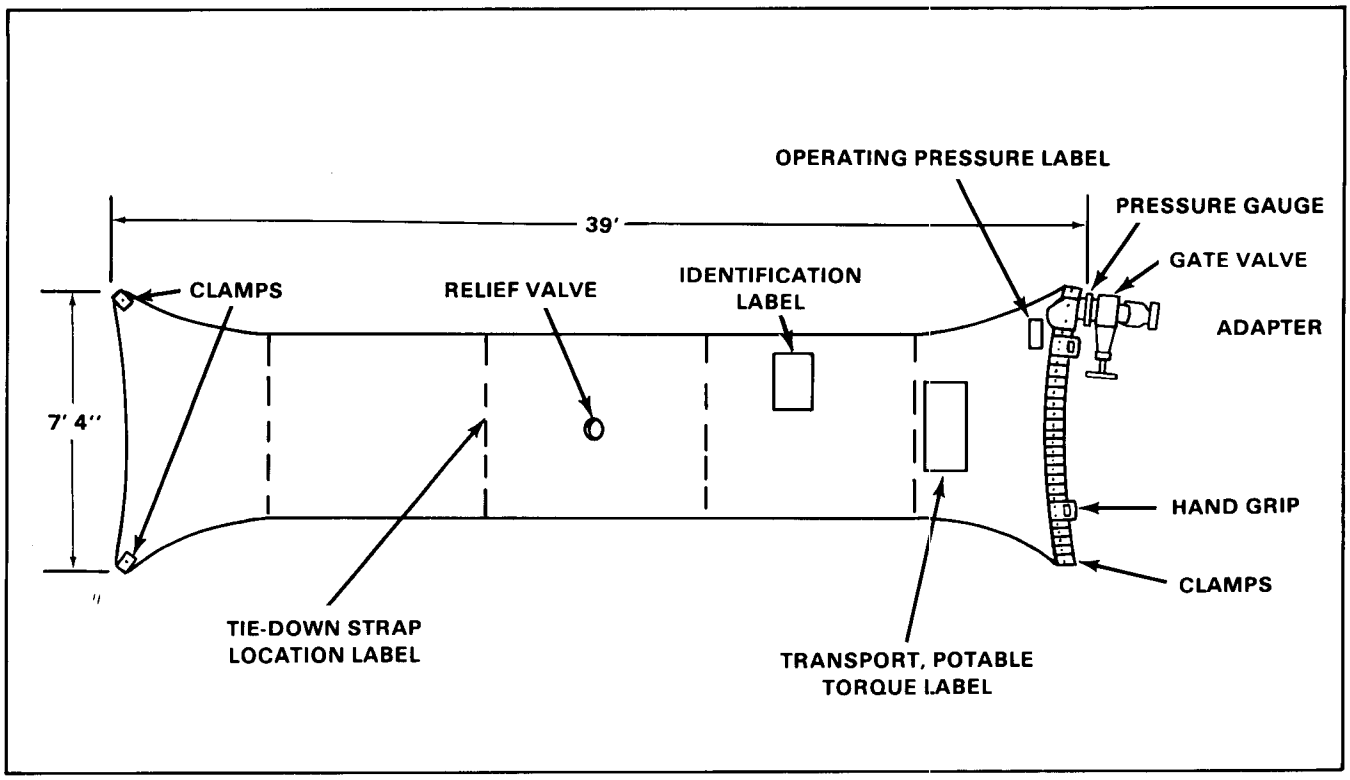

Figure E-4. 5,000-gallon SMFT

Collapsible Tank, 5,000-Gallon

The tank is constructed of a chlorobutyl liner, a rubber-coated, multi-ply carcass, and an exterior weather, abrasion-resistant tread stock. When laid flat, the tank is 39 feet long, 7 feet 4 inches wide, and 4 inches high. When filled, it assumes a pillow-like shape approximately 38 feet long, 5 feet 2 inches wide, and 4 feet 6 inches high. Access to the tank interior is provided through the use of end clamps which you may remove. Handles are provided to facilitate positioning of the tank while empty.

- Fittings. The tank is furnished with a 4-inch filler/discharge assembly consisting of a male quick-disconnect, a 4-inch gate valve, a pressure gauge, two 10-foot lengths of 4-inch hose, and a manually operated relief valve located in the top center of the tank.
- Tie-down assembly. The tie-down assembly consists of four belts with eight ratchet take-up mechanisms and trailer attachments specifically designed to minimize tank movement during transport.
- Emergency repair kit. The emergency repair kit includes temporary repair items, such as plugs and clamps, to affect repair.

Section III

TWDS

CHARACTERISTICS AND FEATURES

The TWDS is intended for operation by a water supply company or tactical water distribution teams in GS operations in arid environments. The system consists of four major equipment groups: two storage assemblies, two distribution points, one 10-mile hose line segment, and six pumping

stations (Figure E-5, page E-6). The four equipment groups are further subdivided into nine packing groups. This breakdown is shown in Figure E-6 (page E-7). The figure shows the packing groups for each equipment group, the number of crates in each packing group, and the name of each packing group. The nine packing groups that make up the TWDS contain a total of 47 or 48 crates, depending on whether there are 32 or 33 crates in group 8. The crates are plywood-sheathed, skidded, and equipped with headers for using a forklift. The crates are plainly marked to indicate the name of the equipment group and packing group to which the crate belongs. The system is capable of transporting water at 600 GPM over level terrain.

MAJOR COMPONENTS

The pumping stations, storage assemblies, distribution points, and the 10-mile segment hose line are major components of the TWDS. They are described in the following paragraphs.

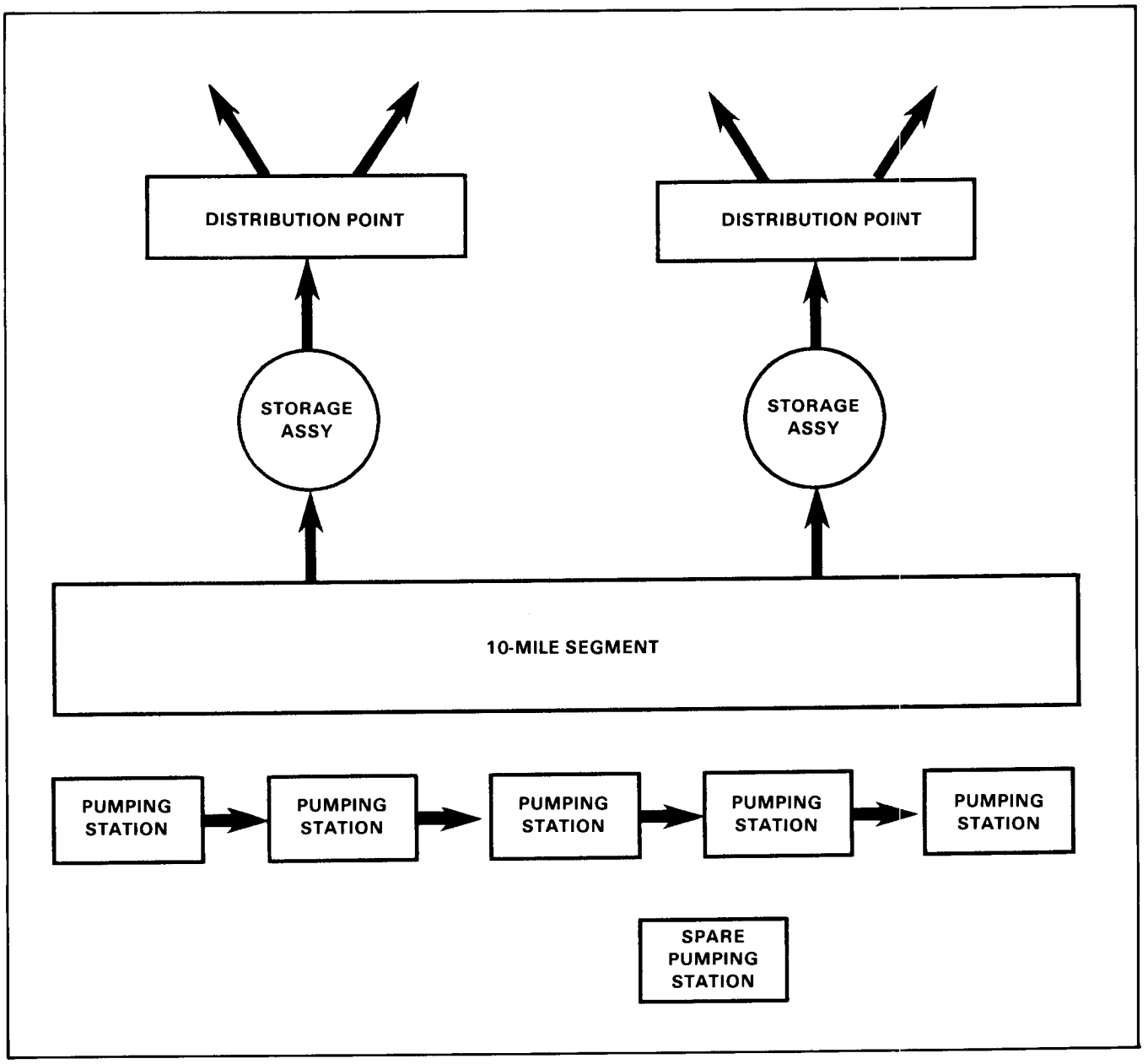

Figure E-5. TWDS major equipment groups

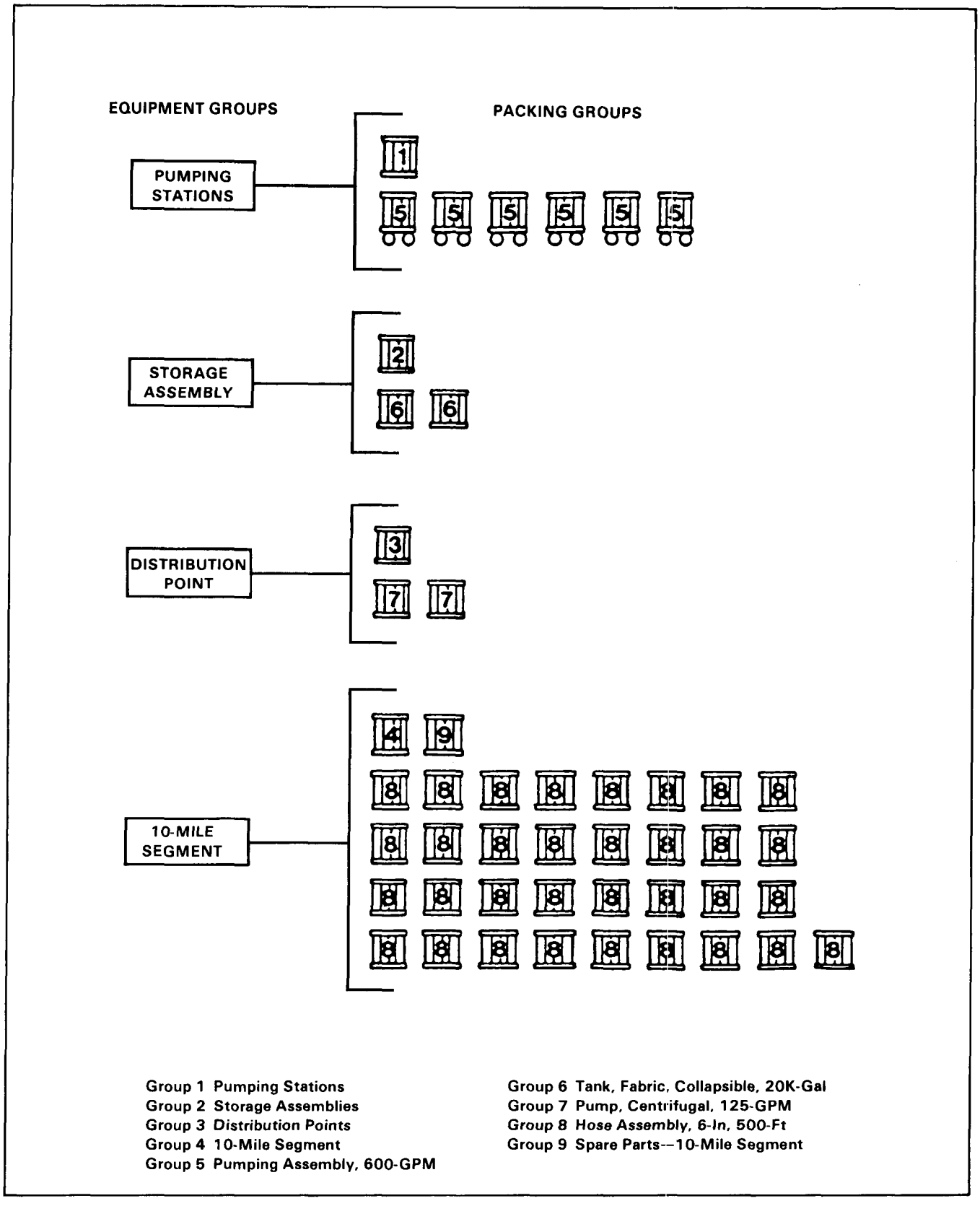

Figure E-6. TWDS packing groups

Pumping Stations

The TWDS comes with six trailer-mounted pumps, each capable of delivering 600 gallons of water per minute against a head or elevation gain of 350 feet. The pumps are the self-priming centrifugal type and are rated at 150 psi working pressure and -30 to 200 psi suction pressure. They are driven by six-cylinder, turbocharged diesel engines that have a four-hour (12-gallon) fuel capacity. The crankcase holds 6 quarts of oil and the radiator holds 7 gallons of antifreeze solution. The engine is rated at 120 HP at 2,400 RPM. The coupled pump and engine are mounted on a two-wheel trailer assembly that is equipped with highway lights, an inertial braking system, a manually operated parking brake, and jack stands. The trailer mounting enhances mobility and enables rapid deployment. A control panel mounted on the pump controls pump and engine operations.

Storage Assemblies

The TWDS comes with two 20K collapsible fabric tanks and accessory equipment. Depending on requirements, locate these storage assemblies together or at separate sites along the hose line. The assembly consists of the collapsible tank constructed of one-ply nylon fabric impregnated with chlorobutyl, vent and drain assemblies, a 1/2-inch drain hose, and control valve assembly. When filled, the tank assumes a pillow shape. Do not overfill the tank as it may burst. Do not use the tank on steeply sloping ground or it may roll. The maximum slope of the ground must not exceed 3 inches per 100 feet. Handles are provided along all sides of the tank for moving and positioning while empty. Pump water into the tank at 350 GPM until the tank is 90 percent filled; at that time, reduce the flow to 100 GPM. When not in use, fold or roll the tank and store it in the shipping container. Use the repair kit included with each tank to temporarily seal punctures or tears in the tank while it is full. Use a vulcanized rubber patch to permanently repair the tank when it is removed from service.

Distribution Points

The TWDS includes all necessary components to install two distribution points. These components include a 125-GPM pump, a hypochlorinator, and all necessary valves and hoses to connect two spigot-type elbow valves and two gravity nozzles. Two stand assemblies are provided to hold the elbow valves and nozzles when not in use. The distribution points are not designed for direct connection to the TWDS hose line. Use them in conjunction with a storage assembly to distribute water to SMFTs, water trailers, FAWPSS drums, and other water carriers.

The 126-GPM pump. The 125-GPM pump is a skid-mounted, self-priming centrifugal type water pump rated at 125 GPM at 50 feet head. It is powered by either a one-cylinder, air-cooled diesel engine rated at 3.8 HP at 3,600 RPM or a one-cylinder, air-cooled gas engine rated at 3 HP at 2,500 RPM. Its dimensions are 32 by 37 by 24 inches, and it weighs 144 pounds. Fuel is supplied by either an internal 1-gallon tank or a 5-gallon gas can with a flexible spout and fuel adapter assembly supplied with the set. Engine oil capacity is .79 quarts.

Hypochlorinator. The hypochlorinator unit provides automatic chlorination of the water before it is distributed. Automatic operation of the hypochlorination unit means that, during periods of changing flow, each gallon of water will receive the same amount of chlorine. This automatic operation is achieved by linking the operation of a water motor through a pilot valve to a hydraulically controlled hypochlorinator which regulates the amount of chlorine injected into the water passing through the unit. As the flow of water through the meter changes, the amount of chlorine injected into the water also changes. The hypochlorination unit incorporates a pressure regulating valve that maintains a pressure of at least 100 psi within the unit to ensure proper operation of the hypochlorinator. The hypochlorination unit can automatically treat from 2 to 100 gallons of water per minute. A range-adjusting valve is provided for establishing maximum accuracy of the unit within some portion of its operating range. At installation, the range-adjusting valve is positioned at its maximum setting of 100 GPM and then backed off, depending on chlorine demand and required chlorine residual. The hypochlorination unit is skid-mounted and portable. Three soldiers can place it into position. Quick-disconnect couplings are provided for installation in the threaded ports on the unit to enable hookup to the distribution point hose network. The unit is 33 by 30 by 31 inches and weighs 230 pounds.

Distribution hoses. The distribution point hoses are rigid-walled and equipped with quick-disconnect fittings to enable rapid installation. When connected, the hoses form a branching network that terminates at four manual valving stations. The valving stations can be equipped to conveniently distribute water to a variety of containers. With water flowing from all four stations, each station can distribute 15 to 20 gallons of water per minute.

10-Mile Segment Hose Line

The 10-mile segment includes all other components necessary to install, operate, maintain, and repack the TWDS. It contains the 500-foot hose line lengths used to connect pumping stations and storage assemblies, flaking boxes for hose line, pressure-reducing valve, and flaking box sling assembly. In addition, the 10-mile segment contains the road crossing guards and kits required to suspend, repair, and repack the hose line. A spare parts crate is also included with the 10-mile segment.

Hoses. The 6-inch by 500-foot hose line lengths are made from lightweight, collapsible rubber. Their being lightweight facilitates movement of the empty hose line by hand during laying or repacking operations. Because the hose line lengths are collapsible, compact them for movement or storage. The hose line lengths are made from a rubber that does not impart any unpleasant odor or taste to the water and remain flexible at temperatures of -25°F. Use victaulic couplings to connect the hose line lengths. These couplings compensate for expansion or contraction of the hose line and allow for slight misalignment of hose ends. At every other hose line connection, install a swivel joint to relieve any twisting in the hose line that may occur during installation or result from pressure surges afterward. An end cap is provided to terminate the hose line if dead-end service is required.

Flaking boxes. The flaking boxes consist of a welded structural steel frame with reinforced plastic panels. Each box measures 74 by 92 by 12 inches and is capable of holding one 500-foot hose line length. The flaking boxes are unpaneled on the top side to allow access to the box interior during repacking. The front of each box is sealed by a tailgate assembly which you remove and replace with a fabric breakaway prior to laying the hose line. The flaking boxes are equipped with four lifting clevises for attaching the lifting sling, channels for lifting with a forklift, and legs for nesting stacked flaking boxes. An eyebolt is provided as an anchor for the block and tackle used to compress the hose during repacking. The flaking boxes are intended to be handled in groups of four during the hose line laying operation. In this way, once the four hose line lengths are connected, 2,000 feet of hose line can be unfolded and laid from the back of one truck in about 10 minutes.

Pressure-reducing valve. Each TWDS includes one pressure-reducing valve. The valve is a portable, self-contained unit. It is mounted on a skid and equipped with victaulic fittings at the inlet and outlet ports for attachment to the hose line. The valve is installed in the hose line at a point where the water pressure is expected to exceed the normal operating pressure of 150 psi. It protects the hose line and other components from build-up of excessive pressure which can cause damage. In general, the pressure-reducing valve must be installed whenever there is a loss in elevation of 75 feet or more from one pumping station to the next. The pressure-reducing valve is an automatic valve designed to maintain a constant outlet pressure regardless of changes in the flow rate or inlet pressure. Basically, the valve consists of a main valve and a pilot control system. The control system is very sensitive to slight pressure changes and immediately controls the main valve to maintain the desired downstream pressure. Pressure-setting adjustment is made with a single adjusting screw. The adjusting screw is protected by a screw-type housing which can be sealed to discourage tampering. After installation, adjust the valve so that downstream hose line pressure does not exceed 150 psi and so the pressure at the suction port on the next downline pumping station is less than 120 psi. After initial adjustment, the valve requires no monitoring, except for periodic inspection. If downstream pressure changes, the valve automatically opens or closes to maintain the selected pressure.

Lifting sling. The TWDS lifting sling lifts flaking boxes in the field when a forklift is not available. The lifting sling is capable of handling a stack of up to four flaking boxes at one time. It is

used with a crane with a minimum lifting capacity of 6,000 pounds.

Road crossing guards. The TWDS includes road crossing guards that protect the hose line from damage whenever it must be buried beneath a road or railroad right-of-way. The road crossing guards serve as a barrier between the buried hose and the heavy loads of vehicular traffic. Each road crossing guard is 5 feet in length. If the width of a road being crossed is 15 feet for example, you need three or four road crossing guards to protect the hose line. The TWDS comes with 24 road crossing guards.

Suspensions kit. The TWDS includes five metal chests containing kits of materials for constructing suspensions across streams, ponds, or gullies. Each kit contains enough rope, cable, saddles, sheaves blocks, shackles, turn buckles, and pickets to construct a suspension spanning 300 feet or two shorter spans with a total distance not to exceed 300 feet. Materials suitable for lashing tripods are not included in the kit and must be procured or fabricated locally.

Displacement and evacuation kit. The TWDS also comes with a displacement and evacuation kit. This kit is contained in a metal chest. It removes water and air from the hose line prior to repacking. A 250-cfm air compressor is provided to operate the kit. It forces a polyurethane ball that fits snugly within the hose through the hose, using compressed air as a propellant. As the ball is forced through the hose, it displaces all the water. When the ball arrives at the hose end, it is captured by a receiver. The hose end is then plugged and a vacuum is applied until the air within the hose is evacuated and the hose collapses. After the hose collapses, end caps are installed to prevent the hose from expanding before it is repacked.

Packing kit. The packing kit is contained in a metal chest and consists of items needed to repack the hose line in the flaking boxes. The kit includes a two-piece pullboard assembly and a chain hoist for compressing the hose in the flaking box. Two toggle clamps restrain the compressed hose while additional hose is flaked into the box and compressed. The toggle clamps are then moved forward and the process repeated until the hose line length is packed.

Repair kit. The TWDS comes with a repair kit for repair of the hose line. It is contained in a metal chest and includes enough adapters and victaulic couplings to make three repairs. Repairs consist of cutting out the damaged portion and splicing the ends together. The kit also includes two hose clamps for sealing the hose ends during repair.

Section IV

WATER TRAILERS AND MISCELLANEOUS EQUIPMENT

THE M149, M149A1, AND M625 2-WHEEL, 1 1/2-TON, 400-GALLON POTABLE WATER TANK TRAILERS

The M149, M149A1, and M625 tank trailers transport 400 gallons of water and are towed by a vehicle equipped with an Army standard pintle. An air supply and a 24-volt electrical system are required with the M149 and M149A1. The M625 requires a vehicle with a vacuum booster for its vacuum/hydraulic brake system and a 12-volt electrical system. The trailer may be towed at speeds up to 50 MPH. It has blackout lights and retractable landing gear support assemblies. Empty, the trailer weighs 2,900 pounds; loaded, it weighs 6,235 pounds. It is 161 inches long, 83 inches wide, and 78 inches high (Figure E-7, page E-11). Major components are the water tank valve, faucets, and quick-disconnect coupling. They are described below.

Water Tank Valve

The water tank valve releases water from the water tank into the piping to the faucets. The water tank valve is opened by pulling it out and closed by pushing it in.

Faucets

The faucets are located under the faucet covers on both sides of the frame assembly forward of the

water tank. Activate the faucets by pressing down on the levers, and turn them off by releasing the levers. The quick-disconnect coupling allows a field kitchen or a mobile water chiller to be connetted to the water trailer. It is located under the faucet cover on the right side of the water trailer. It is opened by pulling out the two coupling rings and removing the dust plug. It is closed by inserting the dust plug and securing the coupling rings. The self-draining faucet is located at the rear of the stainless steel water tank on the M149A1 and M149A2 water trailers. It dispenses water from the water tank when the temperature is below freezing. Open the faucet by turning it counterclockwise to allow water to be released. Close it by turning it clockwise.

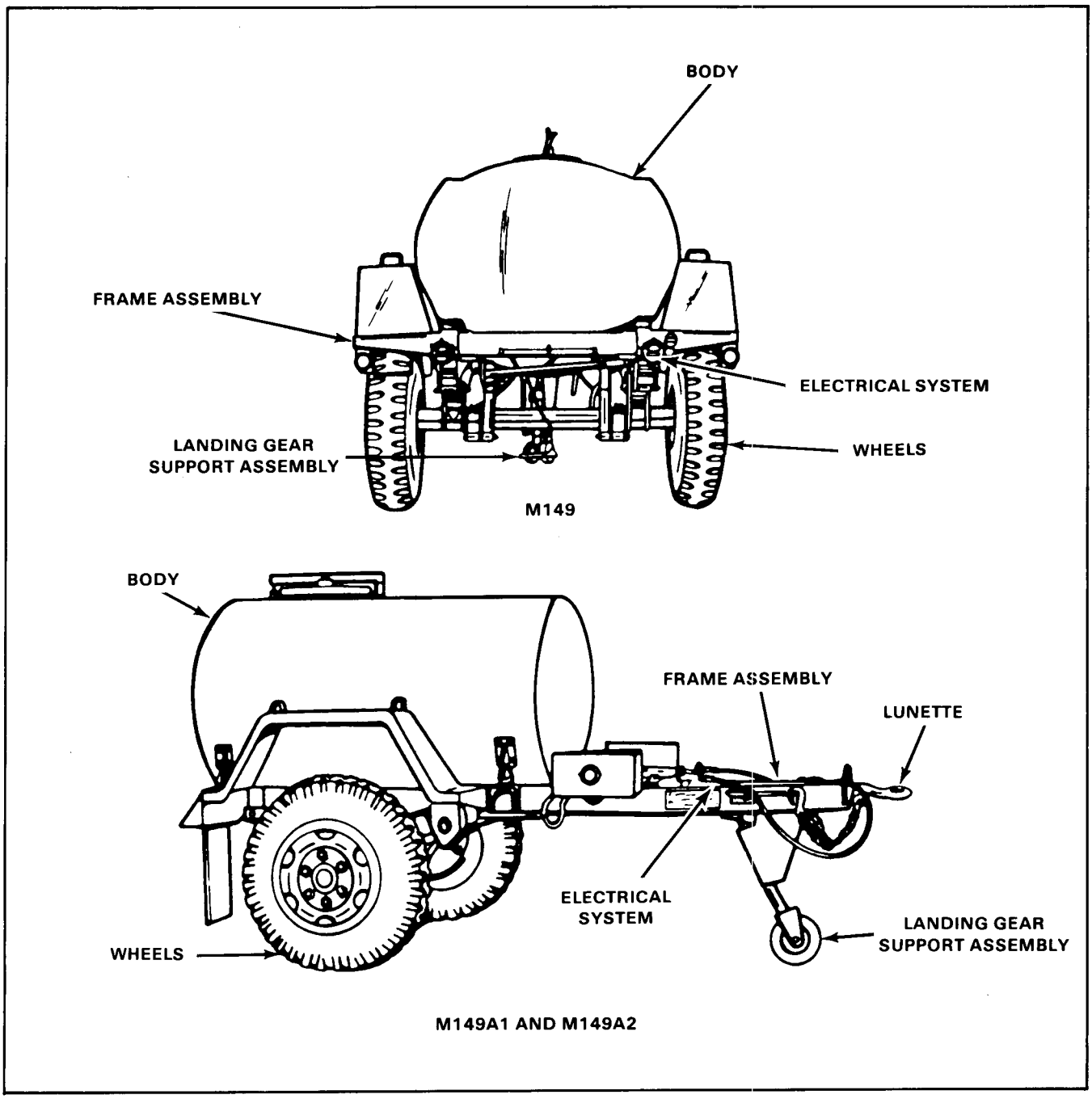

Figure E-7. 400-gallon water trailer

THE 250-GALLON, POTABLE WATER, NONVENTED, COLLAPSIBLE FABRIC WATER DRUM

The 250-gallon collapsible water drum (Figure E-8, page E-12) is used for the storage and transportation of potable water. Many of the component parts (front and rear plates, for example) are identical to those used with the 500-gallon water drum. This drum is a durable, nonvented, collapsible rubber container designed for a working pressure of 4 to 5 psi and a maximum pressure of 30 psi. When filled to its 250-gallon capacity, the drum is cylindrical in shape and can also be towed with a towing and lifting yoke for short distances over smooth terrain at speeds not to exceed 10 MPH. The drum is constructed of water-resistant, synthetic rubber impregnated rayon. The interior front and rear plates are identical to those used in the 500-gallon water drum and are attached by wire rope cable assemblies to form a closure and an interior support for the drum. The front plate has a threaded coupler valve assembly identical to that used with the 500-gallon water drum. When empty, fold the drum so it can be transported by cargo trucks. Crated, the drum weighs 280 pounds, is 64 inches long, 32 inches wide, and 18 inches high. Uncrated, the empty drum weighs 205 pounds; filled, it weighs 2,290 pounds. Major components are the towing and lifting yoke, tie-down kit, and repair kits. They are described below.

Towing and Lifting Yoke

A towing and lifting yoke can be attached to the ends of the 250-gallon water drum for use in towing and lifting the drum.

Tie-down Kit

A tie-down kit is used to secure drums when they are being transported by cargo truck.

Repair Kits

The repair kits are furnished for emergency use only to prevent leakage until the operator can empty the drums. When using these kits to make emergency repairs, do not move, tow, lift, or transport the repaired drum until it is completely empty.

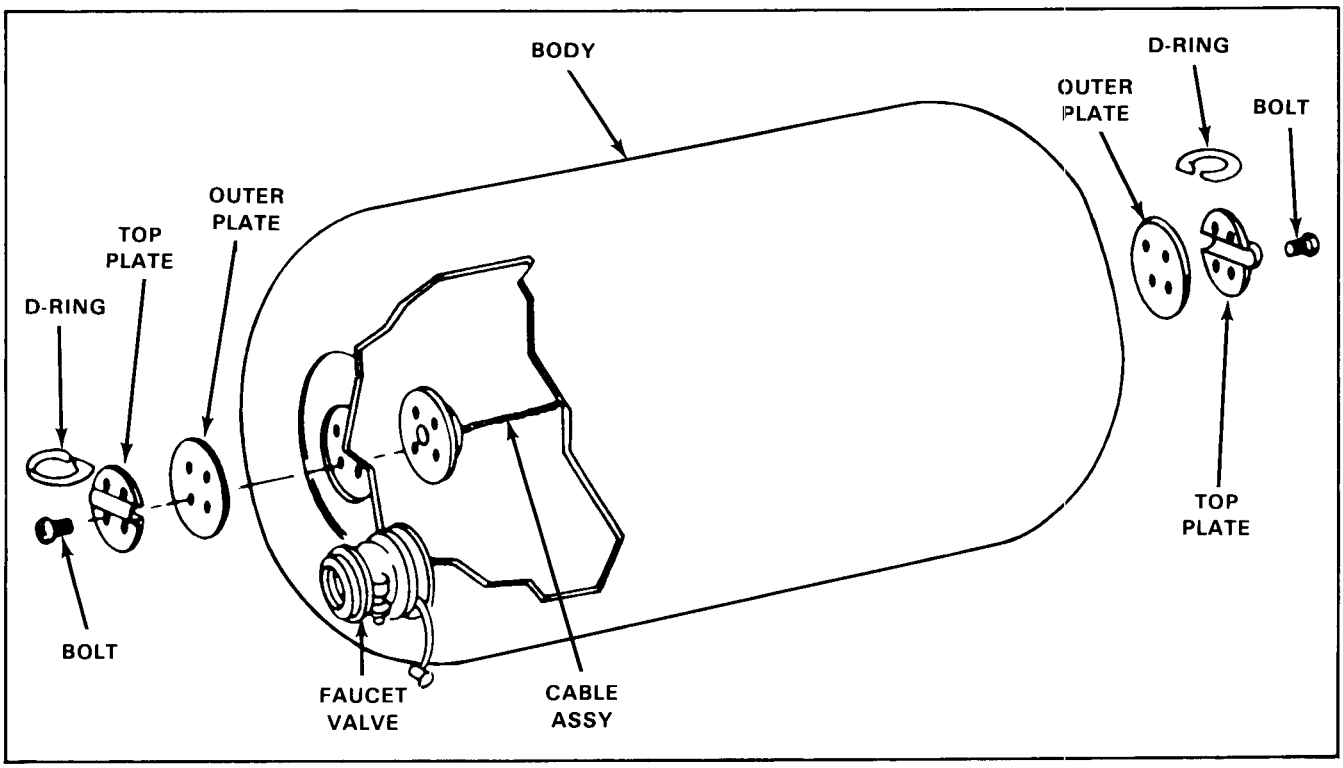

Figure E-8. 250-gallon collapsible drum

THE 55-GALLON, POTABLE WATER, NONVENTED, COLLAPSIBLE FABRIC WATER DRUM

The 55-gallon collapsible water drum (Figure E-9, page E-13) is used for the storage and transportation of potable water. This drum is a durable, nonvented, collapsible rubber container designed for a working pressure of 4 to 5 psi and a maximum pressure of 20 psi. When filled to its 55-gallon capacity, the drum is cylindrical in shape and is fitted with a faucet valve to permit the evacuation of its contents. The drum is constructed of water-resistant, synthetic rubber impregnated rayon. It is equipped with D-ring fitted end plates which are connected by a single wire rope cable. When empty, fold the drum to permit transportation by cargo trucks. Uncrated, the empty drum weighs 50 pounds; filled, it weighs 508 pounds.

The tie-down kit and repair kits are major components of the drum. They are described below.

Tie-down Kit

A tie-down kit is used to secure drums when they are being transported by cargo truck.

Repair Kits

The repair kits are furnished for emergency use only to prevent leakage until the operator can empty the drums. When using these kits to make emergency repairs, do not move, tow, lift, or transport the repaired drum until it is completely empty.

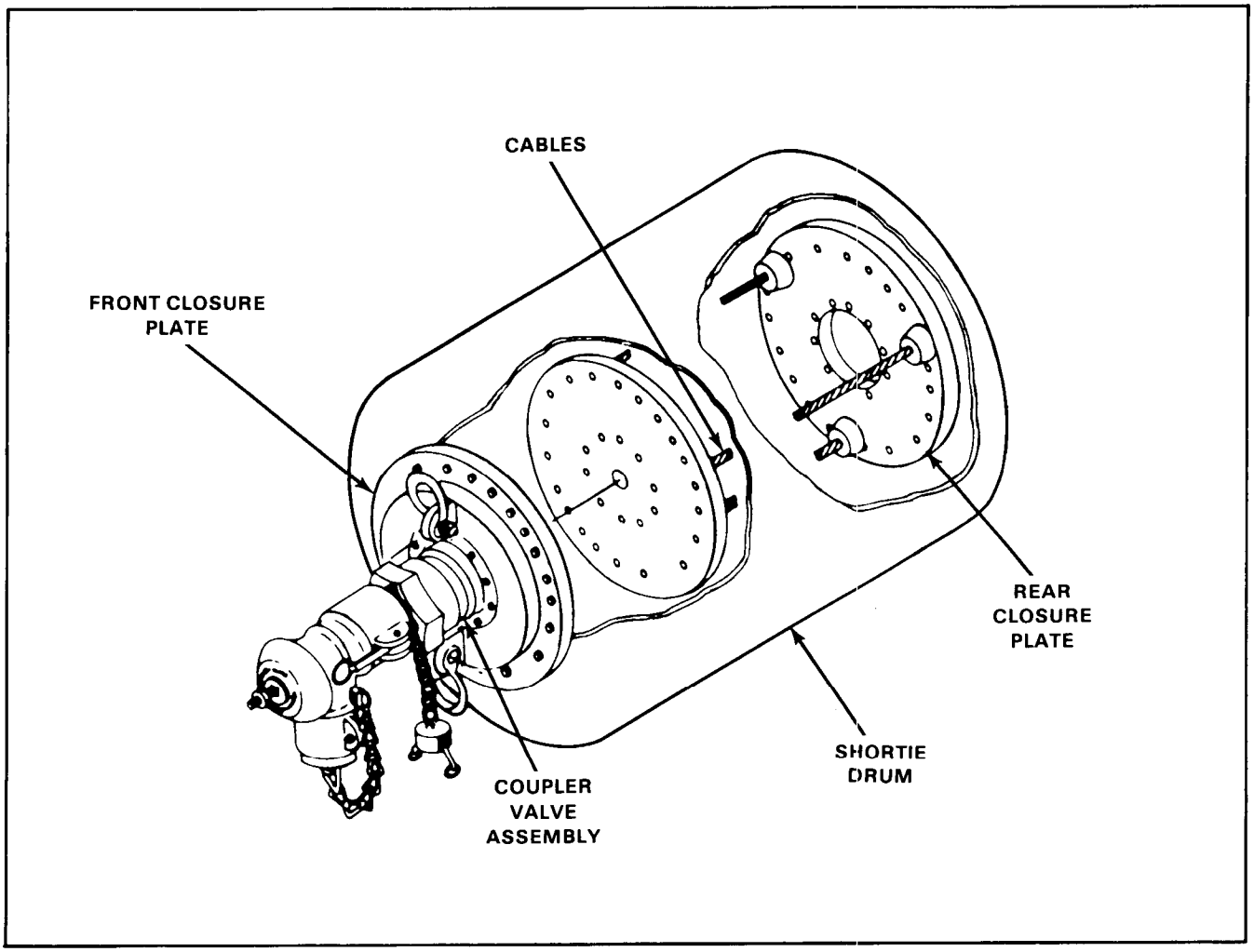

Figure E-9. 55-gallon collapsible drum

Glossary

Absorption - The process of taking in or soaking up liquids (not to be confused with adsorption).

AC - hydrogen cyanide

AC/DC - alternating current/direct current

Acid - A compound, usually having a sour taste, which is able to neutralize an alkali or base. A substance that dissolves in water with a formation of hydrogen ions.

Acidity - A quantitative measurement of the total acid constituents of a water, both in the ionized and unionized states expressed as pH.

Adsorption - The adherence of dissolved, colloidal, and finely divided matter on the surfaces of solid bodies with which they are brought in contact (not to be confused with absorption).

Aeration - The bringing about of intimate contact between air and a liquid by one of the following methods: spraying the liquid in the air, bubbling air through the liquid, or by agitation of the liquid to promote surface absorption of air.

Aerobic - Requiring the presence of free oxygen.

Aerobic Bacteria - Bacteria which live and reproduce only in an environment containing oxygen which is available for their respiration (breathing), such as atmospheric oxygen or oxygen dissolved in water. Oxygen combined chemically, such as in water molecules, cannot be used for respiration by aerobic bacteria.

Algae - *(1)* Tiny plant life, usually microscopic, existing in water. They are mostly green, blue-green, or yellow-green, and are the cause of most tastes and odors in water. *(2)* Microscopic plants which contain chlorophyll and live floating or suspended in water. They may be attached to structures, rocks, or other submerged surfaces. Excess algae growths can impart tastes and odors to potable water. Algae produce oxygen during sunlight hours and use oxygen during the night hours. Their biological activities appreciably affect the pH and dissolved oxygen of the water.

Algae Bloom - Large masses of algae occurring in bodies of water caused by abundant nutrients and favorable temperatures.

Alkali - Various soluble salts, principally of sodium, potassium, magnesium, and calcium, that have the property of combining with acids to form neutral salts and may be used in chemical water treatment processes,

Alkaline - The condition of water or soil which contains a sufficient amount of alkali substances to raise the pH above 7.0.

Alkalinity - A term used to represent the content of carbonates, bicarbonates, hydroxides, and occasionally berates, silicates, and phosphates in water.

Alluvial - Relating to mud and/or sand deposited by flowing water. Alluvial deposits may occur after a heavy rain storm.

Anaerobic - Requiring the absence of free oxygen.

Anaerobic Bacteria - Bacteria that live and reproduce in an environment containing no free or dissolved oxygen. Anaerobic bacteria obtain their oxygen supply by breaking down chemical compounds which contain oxygen, such as sulfates.

Aquifer - A water-bearing formation or stratum beneath the earth's surface which transmits water from one point to another.

Artesian - An adjective applied to ground water or items connected with ground water. For example, a well underground basin where water is under pressure and will rise to a higher elevation if afforded an opportunity to do so.

attn - attention

aux - auxiliary

Backwash - The reversal of flow through a filter to wash clogging material out of the filtering medium and reduce conditions causing loss of head. Also called filter wash.

Bacteria - Primitive microscopic plants, generally free of pigment, which reproduce by dividing. They do not require light for their life processes.

Bacteria Count - An estimate of the total number of bacteria of all kinds in one milliliter sample

which will grow at the stated temperature, usually 37°C. Also known as standard plate count.

Base - An alkali or hydroxide of the alkali metals, and of ammonia, which neutralized acids to form salts and water. Ionizes to form (OH-)ions. A hydroxide. An alkali.

bn - battalion

Brackish Water - Water rendered unfit for drinking because of salty or unpleasant tastes caused by the presence of excessive amounts of dissolved chemicals, chlorides, sulfates, and alkalis.

Buffer - A measure of the ability or capacity of a solution or liquid to neutralize acids or bases. This is a measure of the capacity of water for offering a resistance to changes in the pH.

BW - biological warfare

BZ - hallucinogenic agent

CB - chemical and biological

cfm - cubic feet per minute

Chloramines - Compounds of organic amines or ammonia with chlorine.

Chlorination - Treatment of water by the addition of chlorine either as a gas or liquid, or in the form of hypochlorite, usually for the purpose of disinfection or oxidation.

Chlorination, Breakpoint - *(1)* The application of chlorine to water containing free ammonia to provide a free available chlorine residual. *(2)* The addition of chlorine until the chlorine demand has been satisfied and further additions result in a chlorine residual proportional to the amount of chlorine added after breakpoint has been reached.

Chlorination, Post - The application of chlorine to water subsequent to any treatment. The term refers only to the point of application.

Chlorination, Pre - The application of chlorine to water prior to any treatment.

Chlorine - A powerful disinfectant used extensively in water treatment. As a gas, its color is greenish-yellow and it is about 2 1/2 times heavier than air. As a liquid, it is amber and about 1 1/2 times heavier than water. It is toxic to all organisms and corrosive to most metals.

Chlorine, Combined, Available Residual - That portion of the total residual chlorine remaining in water at the end of a specified contract period which will react chemically and biologically as chloramines or organic chloramines.

Chlorine Demand - The difference between the amount of chlorine added to water and the amount of residual chlorine remaining at the end of a specified contact period. Chlorine demand may change with dosage, time, temperature, pH, nature, and amount of the impurities in the water.

Chlorine Dose - The amount of chlorine applied to a given amount of water. Usually measured in mg/1 or ppm. The chlorine dose is equal to the chlorine demand plus the chlorine residual when breakpoint chlorination is being used.

Chlorine, Free Available Residual - That portion of the total residual chlorine remaining in water at the end of a specified contact period which will react chemically and biologically as hypochlorous acid, HOCl, or hypochlorite ion (OCI-).

Chlorine Residual - The total amount of chlorine (combined and free available chlorine) remaining in water at the end of a specified contact period following chlorination.

CK - cyanogen chloride

Clarification - Process of subsidence and deposition by gravity of suspended matter carried by water or other liquids. Also called settling, it is usually accomplished by reducing the velocity of flow of the liquid below the point where it can transport the suspended material.

co - company

CO - concentrate and confine

Coagulant - A chemical or material which when added to water will combine with added or naturally present chemicals to form a precipitate, called a floe, which will settle and aid in the removal of suspended matter in the liquid.

Coagulation - The destabilization and initial aggregation of colloidal and finely divided suspended matter by the addition of a floe-forming chemical.

Coliform Organisms - A group of bacteria, predominantly inhabitants of the intestine of

humans, but also found on vegetation, including all aerobic and faculative anaerobic bacilli that ferment lactose to produce a gas as one of the by-products.

Colloids - Finely divided solids which will not settle but may be removed by coagulation or biochemical action.

Color, Apparent - Pigmentation due to the presence of suspended solids in a water supply.

Color, True - Pigmentation due to the presence of finely divided particles or droplets either dispersed or in solution in a water supply.

Command Surgeon - The brigade surgeon, division surgeon, or corps surgeon responsible for provision of medical support at the brigade, division, or corps concerned.

COMMZ - communications zone

Compound - A substance containing molecules or two or more different elements which have entered into chemical combination with each other to form another substance unlike any of the constituent elements.

Concentration - A measure of the amount of dissolved substances contained per unit volume of solution. May be expressed as grains per gallon, pounds per million gallons, or milligrams per liter.

Contaminant - As referred to in QSTAGs and STANAGs, any physical chemical, biological, or radiological substance or matter in water.

Contamination - A general term signifying the introduction into water of microorganisms, chemicals, wastes, or sewage which renders the water unfit for its intended use. Usually considered to imply the presence or possible presence of disease-producing bacteria. A specific type of pollution.

Corrosion - *(1)* The destruction of a substance, usually a metal, or its properties because of a reaction with its (environment) surroundings. *(2)* A complex chemical or electrochemical action in which metals are converted into metallic ions and are carried into solutions resulting in damage to pipes, fittings, and other metal components.

COSCOM - corps support command

CP - command post

CU - color unit

CW/BW - chemical warfare/biological warfare

DA - Department of the Army

DC - District of Columbia

DE - delay and decay

DI - dilute and disperse

Discharge - *(1) As* applied to a stream, the rate of flow or volume of water flowing at a given place within a period of time. *(2)* The process of water or other liquid passing through an opening or along a conduit or channel. *(3)* The water or other liquid which emerges from an opening or passes along a conduit or channel,

DISCOM - division support command

Disinfectant - Any oxidant, including but not limited to chlorine, chlorine dioxide, chloramines, and ozone added to water in any part of the treatment or distribution process, that is intended to kill or inactivate pathogenic microorganisms.

Disinfection - The process of killing most (but not necessarily all) of the harmful and objectionable microorganisms in a fluid by various agents such as chemicals, heat, ultraviolet light, ultrasonic waves, or radiation.

Dissolved Solids - Solids that are present in solution.

DOS - days of supply

Drawdown - The lowering of the water surface in a well and of the water table or piezometric surface adjacent to the well resulting from the withdrawal of water from the well by pumping. Drawdown is the difference between static level and pumping level.

DS - direct support

DS2 - decontamination slurry 2

EAC - echelons above corps

ED - ethyldichlorarsine

Effluent - *(1)* A liquid which flows out of a containing space. *(2)* Water or other liquid partially or completely treated or in its natural state which flows out from a controlled area, be it either a reservoir, basin, or treatment operations.

EMP - electromagnetic pulse

Endemic - A disease or organism that is constantly present to a greater or lesser extent in a particular locality or region.

Eng - Engineer

EPWs - enemy prisoners of war

Escherichia Coli (E. Coli) - One of the species of bacteria in the coliform group. Its presence is considered indicative of fresh fecal contamination.

est - estimated

Evaporation - *(1)* The process by which water passes from a liquid state, at temperatures below the boiling point, to vapor. It is the principal process by which surface or subsurface water is converted to atmospheric vapor. *(2)* The quantity of water, measured as liquid water, removed from a specified surface per unit of time - generally in inches or centimeters per day, month, or year.

EVO - ethylene oxide

F - Fahrenheit

FAWPSS - Forward Area Water Point Supply System

Filter - A device or structure for removing solid or colloidal matter (which usually cannot be removed by sedimentation) from water or other liquids or semiliquids by a straining process whereby the solids are held on a medium of some kind (granular, diatomaceous earth, woven, or porous) while the liquid passes through.

Floe - Small gelatinous masses which are accumulations of microparticles, bacteria, and other organisms formed in a liquid by the addition of chemical coagulant or by the gathering together of particles by mixing.

Flocculation - The formation of floes subsequent to the process of coagulation.

FM - field manual

Fresh Water - Fresh water has a TDS concentration of less than 1,500 ppm. Brackish waters are highly mineralized and have a TDS concentration between 1,500 ppm and 15,000 ppm. Saltwaters have a TDS concentration greater than 15,000 ppm.

ft - feet/foot

G2 - Assistant Chief of Staff, G2 (Intelligence)

G3 - Assistant Chief of Staff, G3 (Operations and Plans)

GA - Tabun (nerve agent)

gal - gallon

Gallery - *(1)* An underground structure designed and installed for the purpose of collecting subsurface water. *(2)* A passageway in a structure, such as a dam, used for obtaining access to interior parts, or to carry pipes, or to house machinery.

GB - Sarin (nerve agent

GD - Somar (nerve agent)

G-M - gamma measurement

GPD - gallons per day

GPH - gallons per hour

GPM - gallons per minute

GPM/D - gallons per man/day

Gross Alpha Particle Activity - The total radioactivity due to alpha particle emission as inferred from measurements on a dry sample.

Gross Beta Particle Activity - The total radioactivity due to beta particle emission as inferred from measurements on a dry sample.

Ground Water - Water occurring in a stratum (aquifer) below the surface of the ground. The term is not applied to water which is percolating or held in the top layers of the soil but to that below the water table.

GS - general support

Hardness - A characteristic of water, chiefly due to the existence therein of the carbonates and sulfates (and occasionally the nitrates and chlorides) of calcium, iron, and magnesium. Causes curding of water when soap is used, increased consumption of soap, deposition of scale in boilers, injurious effects in some industrial processes, and sometimes objectionable taste in the water. Commonly computed from the amounts of calcium and magnesium in the water and expressed as equivalent calcium carbonate.

HD - distilled mustard

Head - The height of the free surface of a fluid above a specified point in a hydraulic system. Head is expressed in linear units (or fractions thereof) such as feet or meters. Head is usually

identified as static, dynamic, friction, velocity, and total.

Head Loss - The decrease in head between two points. Can be caused by obstruction, friction, clogged screen, or filters.

HN - nitrogen mustard

Host - A living animal or plant in which a pathogenic organism grows.

HP - horsepower

HQ - headquarters

HTH - high-test hypochlorite

HUMINT - human intelligence

Hydrogen-ion Concentration (pH) - A measure of the acidity or alkalinity of a solution. A value of seven is neutral; low numbers are acid, large numbers are alkaline. Strictly speaking, pH is the negative logarithm of the hydrogen-ion concentration.

Hypochlorinators - Devices that are used to feed calcium or sodium hypochlorite as the disinfecting agent.

Hypochlorites - Compounds containing chlorine that are used for disinfection. They are available as liquids or solids.

IMINT - imagery intelligence

in - inch

Incubation Period - The time required between infection by a pathogenic organism and the appearance of the signs of a disease.

inf - infantry

Infiltration - *(1)* The flow or movement of water through the pores of a soil or other porous medium. *(2)* The absorption of liquid water by the soil, either as it falls as precipitation or from a stream flowing over the surface. Also called seepage.

Influent - Water flowing into a reservoir, basin, or treatment operation.

Inorganic Matter - Chemical substances of mineral origin, not of basically carbon structure.

Inorganic Waste - Waste material such as sand, salt, iron, calcium, and other mineral materials which are not converted in large quantities by organism action. Inorganic wastes are chemical substances of mineral origin and may contain carbon and oxygen, whereas organic wastes are chemical substances of animal or vegetable origin and contain mainly carbon and hydrogen along with other elements.

Ion - An atom or molecule that has gained or lost one or more electrons.

Ion Exchange - A water treatment process involving the reversible interchange (switching) of ions between the water being treated and the solid resin. Undesirable ions in the water are switched with acceptable ions on the resin.

Ion Exchange Resins (Beads) - Insoluble polymers, used in water treatment, that are capable of exchanging (switching or giving) acceptable actions or anions to the water being treated for less desirable ions.

Ionization - The process of the formation of ions by the splitting of molecules of electrolytes in solution.

IPB - intelligence preparation of the battlefield

ISO - International Organization for Standardization

JTU - Jackson turbidity unit

km - kilometer

kw - kilowatt

L - Lewisite

LAPES - low altitude parachute extraction system

lb/lbs - pound/pounds

L/d - liters per day

Level, Static - The elevation of water table or pressure surface when it is not influenced by pumping or other form of extraction from the ground water body. It is the level of ground water in a well before pumping.

LSD - hallucinogenic agent

m - meter

MASH - mobile Army surgical hospital

MAX - maximum

Maximum Permissible Concentration - The maximum permissible level of a contaminant in water which is delivered to a free-flowing outlet of

the ultimate user of a military water system, except in the case of turbidity where the maximum permissible level is measured at the point of entry to the distribution system. Contaminants added to the water under circumstances controlled by the user, except those resulting from corrosion of piping and plumbing caused by water quality, are excluded from this definition.

Membrane Filtration - A method of quantitative or qualitative analysis of bacterial or particulate matter in a water sample by filtration through membrane capable of retaining bacteria.

mg/l - milligrams per liter

Microorganism - A minute plant or animal in water or on earth that is visible only through a microscope.

Milligrams Per Liter - A unit of the concentration of water or wastewater constituent. It has replaced the parts per million unit, to which it is approximately equivalent, in reporting the results of water analyses.

Mineral - *(1)* Any of a class of substances occurring in nature, usually comprising inorganic substances (such as quartz and feldspar) of definite chemical composition and usually of definite crystal structure, but sometimes also including rocks formed by these substances as well as certain natural products of organic origin, such as asphalt and coal. *(2)* Any substance that is neither animal or vegetable.

ml - milliliter

mm - millimeter

MMC - Materiel Management Center

Molecule - The smallest portion of an element or compound retaining or exhibiting all the properties of the substance.

MOPP - mission-oriented protection posture

MOS - military occupational specialty

Most Probable Number - *(1)* The best estimate, according to statistical theory, of the number of coliform (intestinal) organisms present in 100 ml of a water sample. *(2)* In the testing of bacterial density by the dilution method, that number of organisms per unit volume which, in accordance with statistical theory, would be more likely than any other possible number to yield the observed test result or which would yield the observed test result with the greatest frequency. Expressed as density of organisms per 100 ml.

MP - military police

MPC - maximum permissible concentration

mph - miles per hour

mr/h - milliroentgens per hour

MSR - main supply route

Mud Balls - The end results of the cementing together of sand grains in a filter bed by gelatinous material, such as a coagulant. They may vary in size from a pea to 1 to 2 inches in diameter.

NA - not applicable

NBC - nuclear, biological, and chemical

NCOIC - noncommissioned officer in charge

NCOs - noncommissioned officers

Nonpotable Water - Water that has not been examined, properly treated, and approved by appropriate authorities as being safe for soldiers' consumption. All waters are considered nonpotable until declared potable.

NSN - national stock number

NTU - nephelometric turbidity unit

NW - nuclear warfare

Organic - *(1)* Characteristic of, pertaining to, or derived from living organisms. *(2)* Pertaining to a class of chemical compounds containing carbon.

Osmosis - The passage of a liquid from a weak solution to a more concentrated solution across a semipermeable membrane. The membrane allows the passage of the water (solvent) but not the dissolved solids (solutes). This process tends to equalize the conditions of either side of the membrane.

Palatable Water - Water that is pleasing to the taste and significantly free from color, turbidity, taste, and odor. Does not imply potability.

PAM - pamphlet

Particulate - A very small solid suspended in water which can vary widely in size, shape, density, and electrical charge. Colloidal and dispersed particulate are artificially gathered together by the processes of coagulation and flocculation.

pCi/l - Picocuri per liter

PD - phenyldichlorarsine

Peak **Demand -** The maximum load placed on a water system. This is usually the maximum average load over a period of time such as peak hourly demand, peak daily demand, or instantaneous peak demand.

Permeability - The property of a material which permits appreciable movement of water through it when saturated and actuated by hydrostatic pressure of the magnitude normally encountered in natural subsurface water. Perviousness is sometimes used in the same sense as permeability. The rate of permeability is measured by the quantity of water passing through a unit cross section in a unit time when the gradient of the energy head is unity.

pH - potential hydrogen

pH - A measure of the acidity or alkalinity of a solution. A value of seven is neutral; low numbers are acid, large numbers are alkaline. Strictly speaking, pH is the negative logarithm of the hydrogen-ion concentration.

Picocuri (pCi) - That quantity of radioactive material producing 2.22 nuclear transformations per minute.

Plate Count - An estimate of the number of bacteria in a specified amount of sample which will grow at a certain temperature in a given period of incubation.

PMCS - preventive maintenance checks and services

POL - petroleum, oils, and lubricants

Pollution - The addition of sewage, industrial wastes, or other harmful or objectionable material to water. A general term that does not necessarily signify the presence of disease-producing bacteria.

Polyelectrolyte - A high-molecular-weight (relatively heavy) substance having points of positive or negative electrical charges that is formed by either natural or man-made processes. Natural polyelectrolytes maybe of biological origin or derived from starch products and cellulose derivatives. Man-made polyelectrolytes consist of simple substances that have been made into complex, high-molecular-weight substances. Used with other chemical coagulant to aid in binding small suspended particles to larger chemical floes for their removal from water. Often called a polymer.

Polymer - A chemical formed by the union of many monomers (a molecule of low molecular weight). Polymers are used with other chemical coagulant to aid in binding small suspended particles to larger chemical floes for their removal from water. All polyelectrolytes are polymers, but not all polymers are polyelectrolytes.

Polymer, Anionic - A polymer having negatively charged groups of ions; often used as a filter aid and for dewatering sludges.

Polymer, Cationic - A polymer having positively charged groups of ions; often used as a coagulant aid.

Polymer, Nonionic - A polymer that has no net electrical charge.

Potable - *(1)* Water which does not contain any objectionable substances or pollution and is satisfactory for human consumption. *(2)* Water that is free from disease-producing organisms, poisonous substances, chemical or biological agents, and radioactive contaminants which make it unfit for human consumption and many other uses. Potable water may or may not be palatable.

ppm - parts per million

Precipitate - To separate a substance, in the solid form, from a solution. The substance in solid form which has been separated out.

Precipitation - *(1)* The total measurable supply of water received directly from clouds as rain, snow, hail, and sleet; usually expressed as depth in a day, month, or year; and designated as daily, monthly, or annual precipitation. *(2)* The process by which atmospheric moisture is discharged onto a land or water surface. *(3)* The phenomenon which occurs when a substance held in solution in a liquid passes out of solution into solid form.

Pressure - *(1)* The total load or force acting upon a surface. *(2)* In hydraulics, the term when used without qualifications usually means pressure per unit area (pounds per square inch or kilograms per square centimeter) above local atmospheric pressure.

Priming - *(1)* The action of starting the flow in a pump or siphon. *(2)* The first coat applied to a surface to prevent corrosion to protect the surface.

Product Water - This water is the product from the water treatment process and is ready to be consumed (also called finished water).

psi - pounds per square inch

psid - pounds per square inch differential

psig - pounds per square inch gauged

PVC - polyvinyl chloride

PVNTMED - preventive medicine

PWS/DS - potable water storage and distribution system

QM - quartermaster

Rate of Flow - The volume of water per unit of time which is passing a certain observation point at a particular instant. Common expressions are cubic feet per second, gallons per minute, gallons per day, and million gallons per day.

Raw Water - Untreated water; usually the water entering the first treatment unit of a water purification unit. Water used as a source of water supply taken from a natural or impounded body of water, such as a stream, lake, pond, or ground water aquifer.

Reverse Osmosis - 'The application of pressure to a concentrated solution which causes the passage of a liquid from the concentrated solution to a weaker solution across a semipermeable membrane. The membrane allows the passage of the solvent (water) but not the dissolved solids (solutes). The liquid produced is a demineralized water.

RNA - ribonucleic acid

RO - reverse osmosis

ROWPU - reverse osmosis water purification unit

RPM - revolutions per minute

Runoff - *(1)* In the general sense, that portion of the precipitation which is not absorbed by the deep strata but finds its way into the streams after meeting the persistent demands of evapotranspiration. *(2)* That part of the precipitation which runs off the surface of a drainage area and reaches a stream or other body of water or a drain or sewer.

S2 - Intelligence Officer (US Army)

S3 - Operations and Training Officer (US Army)

S&T - supply and transport

Saturation - 'The condition of a liquid when it has taken into solution the maximum possible quantity of a given substance at a given temperature and pressure.

Sedimentation - Process of subsidence and deposition by gravity of suspended matter carried by water or other liquids. Also called settling, it is usually accomplished by reducing the velocity of flow of the liquid below the point where it can transport the suspended material.

Sequestering Agent - A chemical that causes the completing of certain phosphates with metallic ions in solution so that the ions may no longer be precipitated. Hexametaphosphates are an example.

SGT - sergeant

sig - signal

SIGINT - signal intelligence

SMFTs - semitrailer mounted fabric tanks

Solution - A gas, liquid, or solid dispersed homogeneously in a gas, liquid, or solid.

Solution Feeder - A feeder for dispensing a chemical or other material in the liquid or dissolved state to water at a rate controlled manually or automatically by the quantity of flow. The constant rate is usually volumetric.

SP4 - Specialist 4

Specific Capacity - The rate at which water may be drawn from a formation through a well to cause a drawdown of a stipulated depth. The usual units of measurement are gallons per minute per foot and liters per minute per meter.

Specific Gravity - Ratio of the weight of a unit volume of a substance to an equal volume or water under standard conditions.

Spring - A surface feature where water issues from a rock or soil onto the land or into a body of water, the place of issuance being relatively restricted in size. Springs are classified in accordance with many criteria, including character of water, geologic formation, or geographical location.

STB - supertropical bleach

Sterilization - Destruction of all living organisms, usually by a chemical compound or heat.

Stratum - A geological term used to designate a single bed or layer of rock which is more or less homogeneous in character.

Suspended Solids - All visible material in water which at the time of sampling is not dissolved and which can be removed by filtration.

Suspension - A system consisting of small particles kept dispersed by agitation or by molecular motion in the surrounding water. The permanence of suspension is dependent on the degree of agitation and the size of particles. A colloid is a special kind of suspension.

TA - theater Army

TAACOM - theater Army area command

TB MED - technical bulletin medical

TDS - total dissolved solids

TEMPER - tent, expandable, modular, personnel

Temperature - *(1)* The thermal state of a substance with respect to its ability to communicate heat to its environment. *(2)* The measure of the thermal state on the arbitrarily chosen numerical scale, usually centigrade or Fahrenheit.

TM - technical manual

TOE - table of organization and equipment

TON - threshold odor number

Total Dissolved Solids - All of the dissolved solids in a water. TDS is measured on a sample of water that has passed through a very fine mesh filter to remove suspended solids. The water passing through the filter is evaporated and the residue represents the dissolved solids.

TRADOC - United States Army Training and Doctrine Command

Treated Water - Water that has undergone processing such as sedimentation, filtration, softening, or disinfection and is ready for consumption. Included is purchased potable water which is retreated (chlorinated or fluoridated). Does not imply potability until inspected by PVNTMED personnel and approved by the command surgeon.

Turbidity - *(1)* A condition in water caused by the presence of suspended matter resulting in the scattering and absorption of light rays. *(2)* A measure of fine suspended matter in liquids. *(3)* An analytical quantity usually reported in arbitrary turbidity units determined by measurements of light diffraction.

Turbidity Units - Turbidity units are a measure of the cloudiness of water. If measured by a nephelometric (deflected light) instrumental procedure, turbidity units are expressed in nephelometric turbidity units (NTU) or simply TU. Those turbidity units obtained by visual methods are expressed in Jackson turbidity units (JTU) which are a measure of the cloudiness of water. They are used to indicate the clarity of water. There is no real connection between NTUs and JTUs. The Jackson Turbidimeter is a visual method and the nephelometer is an instrumental method based on deflected light.

TWDS - tactical water distribution systems

uCi/l - microcuries per liter

US - United States

USEPA - United States Environmental Protection Agency

VA - Virginia

VAC - volts alternating current

VDC - volts direct current

Vector - An insect or other organism that carries and transmits a pathogenic amoeba, bacterium, fungus, virus, or worm.

Virus - The smallest (10 to 300 millimicrons in diameter) form capable of producing infection and diseases in humans or other large species. The true viruses are insensitive to antibiotics. They multiply only in living cells where they are assembled as complex macromolecules using the cells' biochemical systems. They do not multiply by division as do intracellular bacteria.

VX - binary nerve agent

Water - A chemical compound consisting of two parts of hydrogen and one part of oxygen and usually having other solid, gaseous, or liquid materials in solution or suspension.

Water-Bearing Formation - A term, more or less relative, used to designate a geological formation that contains considerable ground water. It is usually applied to formations from which the ground water may be extracted by pumping.

Water Quality - The chemical, physical, and biological characteristics of water with respect to its suitability for a particular purpose. The same water may be of good quality for one purpose or use and bad for another, depending on its characteristics and the requirements for the particular use.

Water Table - The upper surface of a zone of saturation (in ground water) where the aquifer is not confined by an overlying impermeable formation.

Well - An artificial excavation that derives water from the interstices of the rocks or soil which it penetrates.

Well, Artesian - A well tapping a confined or artesian aquifer in which the static water level stands above the bottom of the confining bed and the top of the aquifer. The term is used to include all wells tapping such basins or aquifers. Those in which the head is insufficient to raise the water to or above the land surface are called subartesian wells.

WQAS-E - water quality analysis set - engineer

WQAU - water quality analysis unit

References

SOURCES USED

These are the sources quoted or paraphrased in this publication.

Joint and Multiservice Publications

TM 5-545. *Geology*. 8 July 1971.

TM 5-660. *Maintenance and Operation of Water Supply, Treatment, and Distribution Systems.* AFR 91-26. NAVFAC MO-210. 30 August 1984.

TM 5-665. *Operations and Maintenance of Domestic and Industrial Waste water Systems.* AFR 91-15. NAVFAC MO-212. 1 January 1982.

Army Publications

Belvoir Research, Development & Engineering Center Report 2438, *"Nuclear, Biological, and Chemical (NBC) Contamination Threat to Army Field Water Supplies."* January 1987.

DA Pamphlet 738-750. *The Army Maintenance Management System (TAMMS).* 31 October 1989.

FM 3-5. *NBC Decontamination.* 24 June 1985.

FM 3-100. *NBC Operations.* 17 September 1985.

FM 5-20. *Camouflage.* 20 May 1968,

FM 5-166. *Well Drilling Operations.* 30 June 1975.

FM 10-52. *Water Supply in Theaters of Operations.* 11 July 1990.

FM 21-10. *Field Hygiene and Sanitation.* 22 November 1988.

QM Subcourse 5082. *Plan and Organize the Layout of a Tactical Water Distribution System (TWDS).*

*STANAG 2885. *Procedures for the Treatment, Acceptability and Provision of Potable Water in the Field.* 27 October 1982.

TB MED 577. *Occupational and Environmental Health: Sanitary Control and Surveillance of Field Water Supplies.* 7 March 1986.

TM 5-4320-208-12&P. *Operator's and Organizational Maintenance Manual Including Repair Parts and Special Tools List for Pump, Centrifugal; Gasoline Engine Driven; Frame Mtd, 2-Inch, 125 GPM, 50 Foot Head.* 10 September 1982

TM 5-4320-226-14. *Operator's, Organizational, Direct Support, and General Support Maintenance Manual for Pumping Assembly, Diesel Engine Driven, Wheel Mtd, 350 GPH, 275 Ft Head.* 15 August 1984.

TM 5-4320-301-13&P. *Operator's, Organizational, and Direct Support Maintenance Manual (Including Repair Parts and Special Tools List) Forward Area Water Point Supply System.* 6 January 1980.

*Standardization agreement is available from Commanding Officer, Naval Publication and Forms Center, ATTN: NPFC106, 5801 Tabor Avenue, Philadelphia, PA 19120-5099.

TM 5-4320-303-10. *Operator's Manual for Tactical Water Distribution Equipment System (TWDS) Set, 10-Mile Segment.* 14 April 1986.

TM 5-4320-304-14. *Operator's, Organizational, Direct Support and General Support Maintenance Manual, Pump Unit, Centrifugal, Self-Priming, 125 GPM, Class 3, Diesel Driven.* 16 September 1987.

TM 5-4320-309-14. *Operator's, Organizational, Direct Support, and General Support for Pump Unit, Centrifugal, Self-Priming, 125 GPH, Class 3, Diesel-Driven.* 22 January 1990.

TM 5-4610-215-10. *Operator's Manual for Water Purification Unit, Reverse Osmosis; 600 GPH, Trailer Mtd, Flatbed Cargo, 5- Ton, 4- Wheel Tandem, Model RO WPU 600-1 and 600 GPH Skid Mounted Model RO WPU 600-3.15* May 1987.

TM 5-4610-229-10. *Operator's Manual for Water Purification Unit, Reverse Osmosis; 150,000 GPD, Skid-Mounted.* 14 April 1986.

TM 5-4610-232-12. *Operator's and Organizational Maintenance Manual, Water Purification Unit, Reverse Osmosis, 3,000 GPH, Trailer Mounted, Flatbed Cargo, 22 1/2 Ton 8 Wheel Tandem.* (Projected publication date–June 1991)

TM 5-4610-233-13&P. *Operator, Unit, and Intermediate Direct Support Maintenance Manual (Including Repair Parts and Special Tools List) for Water Purification Hypochlorination Unit, Frame Mounted, Automatically Controlled, 350 GPM, Model 1955-3.* 12 April 1990.

TM 5-4610-234-13. *Operator's, Unit, and Direct Support Maintenance Manual for 40,000 Gallon Water Distribution System.* 10 August 1990.

TM 5-5430-212-13&P. *Operator, Organizational, and Direct Support Maintenance Manual; Tank, 5,000 Gallon Fabric, Collapsible, Potable Water, Semi-Trailer Mounted.* 15 September 1986.

TM 5-5430-213-13&P. *Operator and Organizational Maintenance Manual for Tank, 3,000 Gallon, Fabric, Collapsible, Potable Water, Semi- Trailer Mounted.* 27 October 1986.

TM 5-5430-225-12&P. *Operator's and Unit Maintenance Manual (Including Repair Parts and Special Tools List) for Tank, Fabric, Collapsible, Air Column Supported, Open Top, Water Storage, 3,000 Gallon.* 18 August 1988.

TM 5-6115-465-12. *Operator's and Organization Maintenance Manual for Generator Set, Diesel Engine Driven, Tactical Skid Mounted, 30 K W, 3 Phase, 4 Wire, 120/208 and 240/416 V Utility Class, 50/60 HZ, Precise Class, 50/60 HZ, Precise Class, 400HZ, Including Auxiliary Equipment.* 31 January 1975.

TM 9-2330-267-14&P. *Operator 's, Organizational, Direct Support, and General Support Maintenance Manual (Including Repair Parts and Special Tools List) for Trailer, Tank, Potable Water, 400 Gallons, 1 1/2-Ton, 2-Wheel, M149, M149A1, M149A2, and M625.* 23 February 1981.

TM 10-8110-201-14&P. *Operator's, Organizational, Direct Support and General Support Maintenance Manual Including Repair Parts and Special Tools List for Drums, Fabric, Collapsible, Non-vented; 500 Gallon, Liquid Fuel; 250 Gallon, Potable Water, and 55 Gallon, Potable Water.* 10 February 1983.

Nonmilitary Publications

Memtec American Corporation. *Wound and Pleated Cartridge Filter Selection Guide,* Bulletin 1991-G. Timonium, MD. 1985.

DOCUMENTS NEEDED

These documents must be available to the intended users of this publication.

DA Form 1712-R. *Water Reconnaissance Report*. May 1991.

DA Form 1713-R. *Daily Water Production Log-RO WPU*. May 19911.

DA Form 1714-R. *Daily Water Issue Log*. May 1991.

DA Form 1714-1-R. *Daily Water Distribution Log*. May 1991.

DA Form 2028. *Recommended Changes to Publications and Blank Forms*. February 1974.

Index

A
accessibility, 2-2
adsorptive capture, 1-8
aerial suspensions, 6-3
aerial targets, 2-3
aerosol bombs, 7-2
aircraft spray, 7-2
air manifold bleed valve, 4-7
air pressure, 6-5
alarm silence button, 4-7
alert horn, 4-7
algae, 1-15
alkaline material, 1-16
allocation instructions, 6-16
aluminum, 1-15
ammonia, 1-17, 1-18
antipersonnel agents, 7-2
antitelescoping devices, 1-15
aquifers, 3-3, 8-1
arctic,7-6, 8-3
arroyos, 2-2
artillery, 2-3
augers, 2-2

B
backwash, 1-6, 1-10, 1-11, 4-2, 4-8
  pump, 4-1, 4-2
  tank, 4-2
  tank valve, 4-2
  timer, 4-2
  valve, 4-2
bacteria, 1-15, 1-17, 7-2, 8-6
baffle, 1-10
ball receiver, 6-5
base, 3-13
base cluster, 3-13
basket strainer, C-11
bays, 3-10
beta rays, 7-10
biological agents, 7-2
biological weapons, 7-2
bivouac, 2-3, 3-13
blast effects, 7-2
booster pump stop button, 4-7
breakaways, 6-4
breakpoint, 1-18
bridge, 6-4
brine, 8-7
brine concentrate pressure gauge, 4-11
brine flow gauge, 4-2
brine throttling valve, 4-11, 4-12
butterfly valve, 6-2
BW pathogens, 7-2
bypass line, 5-9

C
calcium, 1-15
calibrate, 4-2
canyons, 2-2
capsules, 7-2
carcinogen, 1-16
cartridge
  filter drain valve, 4-2
  filter gauge, 4-2
  filters, 1-6
  filter vent valve, 4-2
caustic detergent, 4-8
centrifugal pump, 6-12
checkpoints, 3-12, 3-13
check valve, 6-2
chemical
  agents, 7-3
  feed pump, 4-2
  overgarment, 7-2
  pump stop, 4-7
  weapons, 7-2
chemicals, 1-1, 1-2, 1-3, 1-5
  destabilization, 1-2
  neutralization, 1-2
chloramines, 1-18
chlorine, 1-16, 1-17, 1-18, 8-6
  demand, 1-17
  dioxide, 1-16, 1-17
  hydrate, 8-7
  residual, 4-2, B-1
citric acid, 4-4, 4-8, 4-9
clarification, 7-1
clay, 1-15
clean/flush tank, 4-7
clevis, 6-6
coagulant aid, 4-10
coagulation, 1-1, 1-2, 1-3, 1-5
collapsible fabric bags, 3-12
collapsible hose, 4-10
collapsible tanks, 2-4, 5-4, D-7
collar, 5-1
color, 1-2, 1-4
compressor, 4-7

concealment, 2-3, 3-11, 5-5
conservation, 3-8, 8-2
contact time, 1-17, 1-18
contamination, 5-2, 7-11, 7-12, 7-15, 7-18
convoy, 5-6
corrosion, 3-10
corrosive solutions, 1-16
cover, 2-3, 3-11, 5-2, 5-5
cover handles, 5-2
cribbing, 8-6
curie, 7-7
cuts, 5-3
cyclone separator, 4-6

D
daily peak demands, 5-1
dams, 3-3
debriefing, 2-4
decontamination, 7-1, 7-3, 7-4, 7-7, 7-18, 7-19, 7-20
deserts, 7-5, 8-1
detainees, 2-4
detector kit, 7-17
detergent, 7-20
detergent clean, 4-8
discharge
  domestic sewage, 2-3
  industrial, 2-3
  manifold, 5-6
disease, 7-2
disinfection, 1-1, 1-18, 7-1
dispersant, 1-15
displacement, 4-19
displacement ball, 6-4, 6-5
distribution pumps, 4-1
distribution valve, 4-7
DOS, 3-12
downline boost pumping station, 6-1
downstream, 3-14
drainage, 2-3, 3-12
drawdown, 3-8, 3-9
DS2, 7-6
dust cap, 5-2
dust plug, 5-2

E
effluent, 1-3, 1-10
ejector assembly, 6-5
electromagnetic energy, 7-2
electrostatic force, 1-8
emergency repair, 5-3
EMP, 7-7
end cap, 6-5
EPWs, 2-4
escapees, 2-4
evaders, 2-4
exposure, 7-3
extended cleaning, 4-8
extent, 3-11

F
fallout, 7-7
fallout predictions, 2-2
FAWPSS, 6-11, 6-12, 6-15
feed pressure low light, 4-8
feedwater flowmeter, 4-11
feedwater pressure gauge, 4-11
feedwater temperature indicator, 4-13
filtration, 1-1, 1-5, 1-10, 1-11
fission, 7-7
flaking boxes, 6-4
flash mixing, 1-5
floats, 3-3
floc, 1-2, 1-3, 1-5, 1-6
  straining, 1-5
flocculation, 1-1, 1-2, 1-3, 1-5
flow, 1-10, 1-11, 4-6, 5-4
flushing, 4-6
fog, 8-6
foot bellows, 5-1
foot valve, 4-10
forklift, 6-5
formaldehyde, 4-12
formulas, A-1
fortifications, 8-6
forward flush valve, 4-6
fouling, 1-15, 3-10
freezing, 8-4
fuel consumption, 4-18
fuel line, 8-3
fumigants, 7-18
fungi, 7-2

G
galleries, 3-3
gamma rays, 7-10
gate valve, 5-2
grayout, 7-6
grounding, 8-6
ground profile, 6-3
guards, 6-3
guerrillas, 3-11

H
handle toggles, 5-2
harbors, 3-10
head loss, 1-6, 1-10, 1-11

heaters, 8-5
high pressure pump, 4-10
high pressure pump pressure high light, 4-7
high pressure pump stop button, 4-7
hose line pump
  manual, 6-1, 6-2
  electric automatic, 6-1, 6-2
  electric manual, 6-1, 6-2
hose lines, 6-1
host nation, 3-12
hot spots, 7-9
HUMINT, 2-4
hydraulics, 1-10, 1-11
hydrodynamic force, 1-8
hydrogen bonding forces, 1-8
hydrogen sulfate, 3-10
hydrogen sulfide, 1-17
hypochlorinator, 5-6, 5-9, D-6
hypochlorite, 1-16
hypochlorite tank, 4-7

I
ice, 8-4
ice floes, 3-10
icings, 8-5
imagery, 2-1
IMINT, 2-4
impurities
  colloidal, 1-2
  dissolved, 1-2
  inorganic, 1-2
  organic, 1-2
  suspended, 1-2
incapacitating agents, 7-16
industrial discharge, 2-3
inflation valves, 5-1
inhibitor, 1-15
initial start-up, 4-2
initial supply, 4-19
inlets, 3-10
insect vectors, 7-2
insulator, 8-5
intake, 3-1
intrusion, 3-8, 3-9
iron, 1-15
iron bacteria, 1-15
issue log, 6-16
issue schedules, 6-15, 6-16
issue water, 5-5

J
jungle, 3-11, 7-5

K
kit
  displacement and evacuation, 6-5
  packing, 6-5

L
lagoons, 3-10
lamp
  high-pressure, 4-2
  low, 4-2
landfills, 1-3
lead pumping station, 6-1
leapfrogging, 5-5
lifting sling, 6-5
lithium, 1-16
log, production, 4-14
lubrication, 8-2

M
M17, 7-4
magmatic heat, 3-7
main circuit breaker, 4-7
maintenance schedules, 6-15, 6-16
manganese, 1-15, 1-17
mechanical capture, 1-8
media filter, 4-8
membrane cleaning compound, 4-13
microcuries, 7-10
micron ratings, 1-8, 1-9
microorganisms, 7-2, 7-12
milliroentgens, 7-11
MOPP, 7-3
mountains, 7-5
MPC, 7-7, 7-9, 7-14, 7-16
MSR, 2-3
multimedia filter gauge, 4-2
multimedia filters, 1-6, 4-14
  intermix, 1-6
  log, 4-8
  vent valve, 4-2
mycotoxins, 7-12

N
NBC-4, 7-3
NBC
  agents, 7-1
  attacks, 7-1
  defense, 7-1
  hazards, 7-1
  intelligence, 7-2
  weapons, 7-1
nerve agents, 7-1, 7-16
neutron particles, 7-7

nitrogen trichloride, 1-18
nonvolatile agents, 7-18
nozzles, 5-7
nuclear strikes, 7-2
nuclear technology, 7-1
nuclei present, 1-5

O
odors, 1-17, 1-18, 3-10
onion tank, 5-1, D-1
operational checks, 4-2
optimum setting, 4-8
order, 3-11
organics
  fulvic, 1-15
  humic, 1-15
organisms, 1-17
  helminth, 1-17
  protozoa, 1-17
organizational strength, 4-18
osmotic pressure, 1-13
oxygen, 1-17
ozone, 1-16

P
packing, 5-1
patching adhesive, 5-3
perched water table, 8-1
permeability, 1-6, 1-9
pH, 1-2, 1-3, 1-4, 1-5, 1-18
pits, 3-1
planks, 8-6
plants, 8-1
playas, 8-1
pneumatic coupler, 6-5
polyelectrolytes, 1-5
  anionic, 1-5
  cationic, 1-5
  nonionic, 1-5
polyelectrolyte tank, 4-7
polyethylene bag, 4-12
porosity, 1-8, 1-9
posttreatment, 7-20
precipitates, 1-16
preheating, 7-6, 8-4
preliminary flush, 4-8
pressure gauge, 6-9
pressure-reducing valve, 6-3
pressure-relief valve, 6-4
pressure tubes, 4-12
pretreatment assembly, 4-10
product flowmeter, 4-8
product water flow gauge, 4-2
product water flow valve, 4-2
product water vent valve, 4-2
production site, 5-1
pullboards, 6-5
pulse dampener vent valve, 4-2
pumping level, 3-8
pumps, 3-1, 3-10, 5-6, 5-8
  backwash, 4-1
  distribution, 4-1
  raw water, 4-1
punctures, 5-3
purifiers, 2-3, 4-1, 4-4, 4-7
PWS/DS, 5-4, 5-6, 5-7, 5-8, 5-9, D-3

Q
quality
  water, 1-1, 1-2, 3-11
quantity, 3-11
quick-disconnect assemblies, 6-12

R
radiacmeter, 7-3, 7-9, 8-4
ratchet, 6-6, 6-9
raw water pressure gauge, 4-10
raw water pumps, 4-1, 4-6
raw water pump stop button, 4-7
recharge, 3-8, 3-9
reconnaissance, 2-1, 2-2
refugees, 2-4
regulate product flow valve, 4-2
repair pouch, 5-1
reset button, 4-2
residual, 1-16
resupply, 4-19, 8-2
reverse osmosis, 1-1, 1-11
reverse osmosis system pressure gauge, 4-8
RO block, 4-10
rocks, 3-1
RO element, 1-13, 4-4, 4-6, 4-8, 4-9, 4-10
  cleaning switch, 4-2
  cleaning systems flush, 4-8
RO pressure gauge, 4-2
ROWPU
  600-GPH, 4-1, C-1
  3,000-GPH, 4-1, C-7
  150,000-GPD, 4-10, C-13
rupture, 6-3

S
sanitation, 2-3
sanitizing flush, 4-7
scale inhibitor, 4-10
screen, 3-1

sealing clamps, 5-3, 6-10
security, 2-3
semipermeable membrane, 1-11, 1-12
semitrailer, 6-5
sequestrant, 4-7, 8-8
shims, 5-6
shutdown, 4-2
sieving, 1-8
SIGINT, 2-4
silica, 1-15
silicone spray, 4-12
site conditions, 2-2
slope, 2-4, 5-6
SMFT, 5-4, 6-1
sodium bisulfite, 4-7
sodium hexametaphosphate, 1-15
sodium hex pump, 4-2
sodium silicate, 7-7
specific capacity, 3-10
spraydown, 7-4
springs
  artesian, 3-7
  gravity, 3-7
  seep, 3-7
  thermal, 3-7
staging areas, 5-5
stakes, 3-1
static level, 3-8
STB, 7-5
storage, 5-1
suction, 3-1, 4-6
suction hose, 4-10, 6-2
sump, 5-6, 8-8
superchlorinated water, 6-9
supply side nuclear water monitoring, 7-11, 7-12
surveillance, 1-1
suspension cables, 6-4
suspension towers, 6-4
swivel joint, 6-3
system pressure control valve, 4-6
system reset button, 4-8

T
tailgates, 6-4
tanks, 3-12, 5-6, 6-9
taste, 3-10
TB MED 577, 7-7, 7-11
tee assemblies, 5-9
TEMPER, 8-5, 8-7
temperature, 1-5, 1-11, 1-17, 1-18
terrain, 2-3, 4-18, 5-6
thermal radiation, 7-1
threat agents, 7-16
tie-down kit, 6-5
toggle switches, 4-2
toxic materials, 7-1
toxins, 7-12
traffic signs, 3-13
transporters, 5-5
troop
  health, 3-14
  morale, 3-14
  welfare, 3-14
tunnels, 3-7
turbidity, 1-2, 1-3, 1-4
turbocharger, 4-12
turnarounds, 3-12
turnouts, 3-12
TWDS, 5-4, 6-1, 6-2, 6-3

U
unit repair, 5-3
unpacking, 5-1, 6-12
urban area, 7-6

V
vessel vent valve, 4-2
victaulic coupling, 6-3
viscosity, 1-9, 8-6
void volume, 1-8, 1-9

W
wadis, 2-2
washdown, 7-18
waste
  agricultural, 2-3
  livestock, 2-3
wastewater, 8-7
water
  column, 6-2
  disinfected, 1-16
  distribution schedules, 6-19
  point, 3-11
  potable, 1-16
  quality, 3-11
  quantity, 3-11
  source, 3-11
  table, 3-3
weather, 4-18
wells
  beach, 3-10
  bored, 3-7
  drilled, 3-7
  driven, 3-7
  dug, 3-7
  jetted, 3-7

wetting agents, 7-20
whiteout, 7-6
winterizing, 7-6, 8-4
wipedown, 7-4
wood plugs, 5-3, 6-10
wound fiber cartridge, 1-6, 1-8, 1-9
WQAU, 1-1, 2-1

Y
yield, 3-10

WATER RECONNAISSANCE REPORT For use of this form, see FM 10-52-1; the proponent agency is TRADOC	DATE	TIME OF RECONNAISSANCE

REPORTED BY *(Name, grade, organization)*

FORWARDED TO *(Name and Organization)*

MAP COORDINATES OF WATER SOURCE

1. Quality-Quantity

TYPE OF SOURCE	TDS	TEMPERATURE
TURBIDITY *(Estimate)*	pH TEST	QUANTITY

2. Site Conditions

SECURITY

DRAINAGE-SOIL TYPE

TERRAIN

BIVOUAC

DISTANCE TO CONSUMERS	ROADS

3. SKETCH OF AREA *(Show road net and traffic circulation.) (Use reverse side for additional sketches, if necessary.)*

DAILY WATER PRODUCTION LOG - ROWPU

For use of this form, see FM 10-52-1; the proponent agency is TRADOC

SHIFT NO

PART I. HOURLY CHEMICAL DOSAGE LOG

WATER POINT NO./ROWPU NO

NCO IN CHARGE

DATE

TIME		CITRIC ACID		SODIUM HEX		CHLORINE		POLYMER		pH		CHLORINE RESIDUAL (ppm)	REMARKS
ON	OFF	KNOB SETTING	CHARGE (Lb.)	KNOB SETTING	CHARGE (Lb.)	KNOB SETTING	CHARGE (Lb.)	KNOB SETTING	CHARGE (ml.)	RAW	FIBERS		
Chemicals Used												SIGNATURE OF NCO IN CHARGE WHEN COMPLETED	
Chemicals On Hand													

PART II. GAUGE AND INDICATOR LOG

WATER POINT NO./ROWPU NO						DATE				SHIFT NO
TIME		PRODUCT WATER FLOW	REVERSE OSMOSIS PRESSURE	CARTRIDGE FILTER	MULTIMEDIA FILTER	RAW WATER FLOW	BRINE FLOW	REVERSE OSMOSIS VESSELS	TOTAL DISSOLVED SOLIDS	REMARKS
ON	OFF	GPM	PSI	PSID	PSID	GPM	GPM	PSID	PPM	
Total Hours Operated					Gasoline *(Gal.)*		**POL on Hand**	Gasoline *(Gal.)*		
				POL Used	Oil *(Qt.)*			Oil *(Qt.)*		
					Grease *(Lb.)*			Grease *(Lb.)*		

DAILY WATER ISSUE LOG

For use of this form, see FM 10-52-1, the proponent agency is TRADOC

WATER POINT NO	NCO IN CHARGE	DATE

TIME	AMOUNT *(Gallons)*	PICKED UP BY *(Using Unit)*
	TOTAL	

REMARKS

DAILY WATER DISTRIBUTION LOG

For use of this form, see FM 10-52-1, the proponent agency is TRADOC

WATER POINT NO	NCO IN CHARGE	DATE

TIME	RECEIVED		DISPATCHED	
	AMOUNT	UNIT	AMOUNT	UNIT
	Total		Total	

Total Amount On Hand

REMARKS

By Order of the Secretary of the Army:

CARL E. VUONO
General, United States Army
Chief of Staff

Official:

PATRICIA P. HICKERSON
Brigadier General, United States Army
The Adjutant General

DISTRIBUTION:

Active Army, USAR, and ARNG: To be distributed in accordance with DA Form 12-11-E, requirements for FM 10-52-1, Commander's Handbook for Water Usage in Desert Operations (Qty rqr block no. 0876).

☆ U.S. GOVERNMENT PRINTING OFFICE : 1994 0- 300-421 (PO. 02326)